Technical Assessment No. 2/15-1678

Voids and supersedes Technical Assessments 2/08-1330, 2/08-1330*01 Add and 2/08-1330*02 Add

ENGLISH TRANSLATION COURTESY OF TERREAL

Notice:
While the information provided here is believed to be correct, Terreal cannot be held liable for any translation errors and inaccuracies. Each individual designer or contractor is responsible for checking the specifications with Terreal for a given installation.

Bardage rapporté
External Wall Cladding
Vorgehängte hinterlüftete Fassadenbekleidung

*Only certified products bearing the CERTIFIE **CSTB** CERTIFIED logo can rely on the present Technical Assessment. The up-to-date list of products concerned is located at the following address:*

www.cstb.fr

Section:

Building Products Certification

Terracotta product

Zephir / Zephir Evolution

Holder:
TERREAL
15 rue Pagès
FR-92158 Surenes Cedex
France

Tel: +33 1 49 97 20 30
Fax: +33 1 49 97 20 56
Website: www.terrealfacade.com

Factory:
TERREAL
FR-31250 Revel
France

Distributor:
TERREAL
Avenue Normandie Niemen
Antipolis – Bâtiment B – BP 13
FR-31700 Blagnac Cedex

Tel: +33 5 34 36 21 00
Fax: +33 5 34 36 21 01
Website: www.terrealfacade.com

Commission in charge of Technical Assessments
(Decree of March21st, 2012)

Specialised Group No.2

Constructions, façades and light partitions

Secretariat of the Commission for Technical Assessments
CSTB, 84 Ave Jean Jaurès, Champs sur Marne, FR-77447 Marne la Vallée Cedex 2, France
Tel.: (33) 1 64 68 82 82 - Fax: (33) 1 60 05 70 37 - Web site: www.cstb.fr

Technical Assessments are published by the Technical Assessment Secretariat, provided by CSTB. Authenticated versions are available free of charge on CSTB's web site (http://www.cstb.fr)
©CSTB 2015

Specialised Group No. 2 - "Constructions, façades and light partitions" – of the Commission on Technical Assessments, examined on May 12th, 2015 the ZEPHIR external wall-cladding system, submitted by the TERREAL Company. The Group issued the present Technical Assessment, that voids and supersedes Technical Assessments No. 2/08-1330*01 Add and 2/08-1330*02 Add. The Technical Assessment is only valid if the certification corresponding to the technical file is enforced, based on annual surveys and outside controls. This Assessment is formulated for applications in European France.

1. Brief description

1.1 Brief description

External wall-cladding system, based on single-wall or double-skin terracotta panels laid on aluminium rails fastened to a metal or timber frame fixed to the building structure.

General characteristics:

Dimensions are as follows:

Reference	Height (cm)	Length (cm)	Thickness (cm)
ZEPHIR	25 and 30	60	1.4
ZEPHIR EVOLUTION	20 to 30	150	
	40	120	
	30 Twin	120	
ZEPHIR double wall	30	60	3.8
ZEPHIR EVOLUTION double wall	20 to 30	120	

- Surface density:
  - ZEPHIR : 32kg/m²,
  - ZEPHIR EVOLUTION : 35kg/m²
- Surface density for double-skin ground floor elements rated Q4: 65kg/m²
- Panels are laid horizontally with open joints, either continuous or broken vertically, and continuous horizontally.
- Colours and finishes: see Table 1 at the end of the Technical File.

1.2 Panel identification

The ZEPHIR / ZEPHIR EVOLUTION elements that have been granted a CERTIFIÉ CSTB CERTIFIED Certificate can be identified by a mark complying with paragraph 6.3, chapter 1, of "Special requirements of CERTIFIÉ CSTB CERTIFIED Certification (EP11) for wall-cladding, insulated wall-cladding and wall-facing, and soffit products".

The mark conforms to §6 of the Technical File.

2. ASSESSMENT

2.1 Accepted field of application

- Installation on flat vertical substrates of coated masonry or concrete, new or in use, sheer or with wall openings, located on upper floors.
- Possible installation on Timber Framed Buildings in compliance with code NF DTU 31.2 but limited to:
  - Maximum height 9m (+ gable) in locations type a, b or c,
  - Maximum height 6m (+ gable) in locations type d,

  and according to the prescriptions of par. 9 of the Technical File.
- Impact performance rating Q1 to Q4 depending on the installation (see §2)
- The wall cladding system can be installed in seismic areas and on building types defined in §2.1 of the Technical File, following the provisions described in Appendices A and B.
- Maximum wind loads (in Pa) corresponding to positive and negative pressures under normal wind conditions, according to Rules NV65 (revised), are shown in Table 2 as a function of the vertical support centre-to-centre distance, and of the number of aluminium support rails defined in §2 of the Technical File.

2.2 Assessment of the system

2.21 Compliance with applicable laws and regulations, and fitness for purpose

Stability

The wall-cladding system does not participate in the functions of load transmission, bracing or severe impact resistance. The supporting structure must perform these functions.

The stability of the wall cladding for this structure is adequate within the accepted field of application.

Fire safety

The checks to carry out (in particular with relation to the so-called "C + D" rule, including for buildings already in service) shall take the following technical characteristics into account:

- Fire reaction rating of the cladding elements: A1
- The flammable mass of the secondary timber framing corresponds to the framing weight, expressed in kg/m². This value is multiplied by 17 to express it in megajoules/m²,
  - The mineral wools used as additional thermal insulation are generally rated A1 or A2-s1,d0 (to be checked on the particular Test Reports depending on their origin).
  - The flammable mass of mineral wool is negligible with relation to the requirement levels.

Prevention of accidents during installation

Such prevention can generally be provided.

Installation in seismic areas

The ZEPHIR/ZEPHIR EVOLUTION wall-cladding system can be installed in seismic areas and on building types found in par. 2.1 of the Technical File, following the provisions described in Appendices A and B.

Thermal insulation

Compliance with applicable thermal regulations shall be checked on a case by case basis depending on the building type.

Thermal calculation data

The heat transfer coefficient U_p of a wall comprising an insulated ventilated wall cladding system is calculated using the following formula:

$$U_p = U_c + \sum_i \frac{Y_i}{E_i} + n \,.\, X_i$$

With:

- U_c superficial heat transfer coefficient of the wall, in W/(m².K),
- Y_i linear heat transfer coefficient of the thermal bridge (frame), in W/(m.K),
- E_i centre-to-centre distance of the thermal bridge i , in m,
- n number of thermal bridges per m² of wall,
- X_i punctual heat transfer coefficient of the integrated thermal bridge j, in W/K (brackets)

Coefficients Y and X must be determined by computer simulation according to the method explained in Th-Bât Rules, Section 5. When no computer calculated values are available, the default values of Rules Th-Bât Section 4/5, paragraph III.9.2-2, may be used.

At specific points, one must also take into account thermal losses due to trims and finishing profiles.

Tightness

Air tightness: must be provided by the supporting wall.

Water tightness: is sufficiently provided for field panels by the small width of open joints between adjacent panels (< 7mm), given the necessary verticality of the construction and the presence of the air space. At specific points, it is provided by finishing profiles.

- On concrete substrate or masonry: the system allows building Type XIII walls in other cases, as described in "General guidelines for the use of systems for outside heat insulation, covered by a Technical Assessment" (CSTB Workbook 1833, March 1983). The supporting walls shall comply with the specifications in Chapters 2 and 4 of this document, and shall be air tight.
- On Timber Framed Buildings: Water tightness is satisfied when used in the field of application described in § 2.1.

Environmental data

An Environmental Statement for this system is mentioned in paragraph C1 of the Technical File prepared by the Requester. This Statement is outside the scope of the study to determine if the product is fit for purpose.

Health issues

This Assessment is formulated based on the written commitment of the requester to abide by the regulations, including all regulatory requirements regarding hazardous materials: their manufacturing, their integration into buildings of the accepted field of application and these buildings' use. Verifications made on the data and statements issued in compliance with regulations are outside the scope of this Assessment. The holder of the present Assessment is solely responsible for the data and filings issued.

Impact performance

The impact load performance for the ZEPHIR / ZEPHIR EVOLUTION corresponds to ratings Q1 to Q4 for easy-to-replace wall cladding products, according to French Standard P08-302 and CSTB's Workbooks 3546-V2 and 3534 (see §2 of the Technical File).

2.22 Durability - Maintenance

Thanks to the durability of the system's components and their compatibility, one can consider that this external wall-cladding system will present a satisfactory durability, equivalent to that of traditional wall-claddings based on terracotta elements.

It is possible to replace an accidentally damaged ZEPHIR / ZEPHIR EVOLUTION panel using a standard panel, independently of adjacent panels.

The supporting wall's durability is improved by installing this wall cladding system, particularly with additional thermal insulation.

2.23 Manufacturing and quality assurance

The production of the ZEPHIR / ZEPHIR EVOLUTION wall-cladding elements is assured by a systematic self-inspection regularly monitored by CSTB, guarantying an acceptable and constant quality level.

The manufacturer holding this Technical Assessment must be able to present a CERTIFIE ***CSTB***CERTIFIED Certificate, issued by CSTB, proving that the product meets characteristics defined in the certification rules, after verifications carried out following control methods described in these rules.

Products bearing a valid certificate can be identified by the presence on the elements of the CERTIFIE ***CSTB***CERTIFIED logo, followed by the factory identification number, and by a product identification number.

2.24 Procurement

The products supplied by TERREAL include ZEPHIR / ZEPHIR EVOLUTION, PHONICERAM, and the supporting rails.

All other components are directly procured by the contractor in compliance with the description that is provided in the Technical File.

2.25 Installation

This wall-cladding system is relatively easy to install, conditioned by a prior survey of the supporting structure, a layout plan of the cladding elements and of additional profiles, and by following installation requirements (Technical Specification Section).

The TERREAL Company provides its technical assistance when requested by the contractor.

2.3 Technical Specifications

2.31 Design requirements

Fasteners

Fasteners in contact with the supporting wall shall be chosen based on wind exposure and their calculated tensile strength for the type of substrate.

When fixing on conventional aggregate concrete walls or masonry, the anchors' ultimate limit state strength shall be calculated following the prescriptions of European Technical Approval or Assessment, ETA Guide 001, 020, or 029.

When the support's characteristics are unknown, the ultimate limit state strength shall be determined with tests conducted prior to installation, in compliance with "On site determination of the ultimate limit state strength for a wall cladding's mechanical fastener" (CSTB Workbook 1661-V2).

Timber frame

The installation of timber framing and thermal insulation shall comply with the provisions found in "General design and installation rules for timber framing and thermal insulation for external wall cladding covered by a Technical Assessment" (*CSTB Workbook* 3316-V2), completed by the following:

- The co-planarity of vertical studs shall be verified between adjacent studs, with a maximum allowed deflection of 2mm;
- Timber studs shall have a mechanical resistance corresponding at least to class C18 of French Standard NF EN 338, and a durability (natural or by treatment) of class No. 2, with protective strip, or class No. 3b, per Standard FD P 20-651;
- At the time of installation, the humidity of timber studs and battens shall not exceed 18%, with a 4% maximum difference between two elements. The humidity level shall be determined following the method described in French Standard NF EN 13183-2 (using a timber moisture meter);
- The fixing brackets shall be tested considering a maximum deformation under load of 1mm;
- The maximum centre-to-centre distance between studs equals:
  - ZEPHIR: 645mm
  - ZEPHIR EVOLUTION: 645mm

Metal frame

The fixed metal framework shall comply with the prescriptions found in "General guidelines for design and installation of metal framing and thermal insulation of external wall cladding covered by a Technical Assessment (*CSTB Workbook* 3194 and addendum 3586-V2), supplemented by the following instructions:

- The frame is made of:
  - Steel: minimum grade S 220 GD
  - Aluminium: series 3000 minimum, with elastic limit Rp0.2 at least 180MPa.
- The co-planarity of the vertical support profiles shall be verified between adjacent profiles, with a maximum allowed deflection of 2mm;
- The bracket's admissible strength to vertical loads to take in account must correspond to a deformation under load equal to 1mm;
- The vertical profiles' maximum centre-to-centre distance is:
  - ZEPHIR: 900mm,
  - ZEPHIR EVOLUTION: 1200mm,
  - ZEPHIR with XL rail: 600mm

The design of the frame requires a calculation, made for each project, by the contractor, helped when necessary by the holder (TERREAL).

2.32 Installation requirements

A layout plan shall be made in advance to locate particular points and identify areas requiring cuts made on-site (see 8.21).

"Bridging" junctions between supporting rails using ZEPHIR / ZEPHIR EVOLUTION elements is prohibited.

Interlocking of elements

When laying ZEPHIR panels using a guide, the contractor shall verify that the bottom lug of the ZEPHIR panel imbricates into the fixing rail by at least 4mm. The open horizontal joint must always be between 4 and 7mm (see Fig.5c).

Installing directly on the wall

Timber studs or metal vertical profiles being fastened directly on the substrate, flatness defects (cracks, bumps, and various irregularities) shall be less than 5mm per 20cm and 10mm per 2m.

This planarity must be considered in the Tender documents.

Installing on Timber Framed Buildings

Install in compliance with Code NF DTU 31.2, 9 of the Technical File, and figures 25 to 29.

The moisture barrier shall be cut every 6m to shed water to the outside.

The frame shall be split at every floor level.

For timber framed buildings, the frame's vertical support battens shall be fixed in front of the building's studs, according to §9.

Conclusion

Overall Evaluation

For the productions of ZEPHIR / ZEPHIR EVOLUTION products holding a CERTIFIE CSTB CERTIFIED certificate issued by CSTB, the use of the system in the proposed field of application receives a favorable assessment.

Validity:

Until May 31st, 2021.

The Vice President,
Specialised Group No. 2

3. Additional remarks from the Specialised Group

This second revision includes the following modifications:

- Integration of addendum 2/08-1330*01 Add and 2/08-1330*02 Add;
- Withdrawal of ZEPHIR height=30.5cm
- Addition of ZEPHIR EVOLUTION sizes:

Height (cm)	Length (cm)	Thickness (cm)
20 to 30	150	1.4
40	120	
30 Twin	120	
20 double-skin	120	3.8

- Addition of a vertical profile with joint,
- Update of colours,
- Extension of installation in seismic areas with the use of 200mm ISOLCO+ brackets.

Since the bottom lug of the ZEPHIR panel enters the bottom aluminium rail only slightly, Specialized Group No.2 considers it is necessary to use an installation guide and confirm the dimensional tolerances of the products.

As to wind load performance, admissible values announced when considering the effect of negative pressures take into account a security factor of 3.5 on failure values. Failure is defined when panels shift and the bottom lug breaks.

ZEPHIR EVOLUTION panels overlap at the top, ZEPHIR panels do not.

The installation of PHONICERAM (perforated ZEPHIR) and PERFORATED ZEPHIR EVOLUTION / ZEPHIR EVOLUTION dB is limited to concrete walls and masonry at one level (ventilation grid).

Installing PHONICERAM (perforated ZEPHIR) or PERFORATED ZEPHIR EVOLUTION / ZEPHIR EVOLUTION dB on Timber Framed Building is prohibited.

The fixing anchors must comply with ETAs based on ETAG 001, 020 or 029.

This assessment is subject to a CERTIFIE CSTB CERTIFIED product certification for ZEPHIR and ZEPHIR EVOLUTION.

The Rapporteur,
Wall cladding
Specialised Group No. 2

Technical File
Prepared by the requester

A. Description

1. Presentation

ZEPHIR / ZEPHIR EVOLUTION is an external wall-cladding system, consisting of single-wall and double-skin terracotta panels, laid on horizontal aluminium rails fixed to a timber or metal framework, itself fixed to the bearing structure.

Additional insulation is generally placed between the substrate and the wall-cladding system. This insulation is ventilated by an air space located between the insulation and the backside of the ZEPHIR / ZEPHIR EVOLUTION panels.

2. Field of application

- Installation on flat, vertical support walls made of coated masonry or concrete, or on timber framed walls, new or in service, sheer or containing wall openings, located at upper floors.
- Specific installation at ground floor in accordance with exposure classes Q3 and Q4 of French Standard P 08- 302 and CSTB Workbooks .No.3546 and 3534-V2.
- Ground floor panels (double-skin) are rated Q4.
- Maximum wind loads (in Pa) corresponding to positive and negative pressures under normal wind conditions, according to Rules NV65 (revised), are shown in the following tables, as a function of the vertical support profiles' centre-to-centre distance, and of the number of aluminium support rails:

ZEPHIR

Panel size H x L (cm)	Framework's centre-to-centre distance 600mm (645mm for timber frame)	Framework's centre-to-centre distance 900mm (645mm for timber frame)
25x60	1,432 Pa	Not covered
30x60	1,115 Pa	740 Pa
	2,522 Pa*	1,030 Pa*
30x60 double-wall	1,115 Pa	Not covered
	2,522 Pa*	

*: With additional horizontal support rail

ZEPHIR EVOLUTION

Panel size H x L (cm)	Framework's centre-to-centre distance 600mm (645mm for timber frame)	Framework's centre-to-centre distance 1200mm (645mm for timber frame)
25 to 25 x 150	1,790 Pa	1,225 Pa
20 to 25 x 120		
26 to 30 x 120	2,184 Pa	1,036 Pa
26 to 30 x 150	1,571 Pa	941 Pa
30x120 Twin		
31 to 40 x 120		
20 to 30 x 120 Double wall	2,184 Pa	Not covered

- The impact load performance of the ZEPHIR / ZEPHIR EVOLUTION corresponds to the following for easy-to-replace wall cladding products, according to French Standard P08-302 and CSTB's Workbooks 3546-V2 and 3534:

ZEPHIR

Panel size H x L (cm)	**Centre-to-centre 900mm**	**Centre-to-centre 600mm (645mm for timber frame)**	**Centre-to-centre 300mm**
30 x 60	Q2	Q1	Q3 + additional rail
25 x 60	Not covered	Q1	Q3 + additional rail

ZEPHIR EVOLUTION

Panel size H x L (cm)	**Centre-to-centre 1200mm**	**Centre-to-centre 600mm**	**Centre-to-centre 300mm**
20 x 120	Q1	Q3	Q3
25 x 120	Q1	Q1	Q4 + additional rail
30 x 120	Q1	Q1	Q4 + additional rail
30 x 120 Twin	Q1	Q1	Q4 + additional rail
40 x 120	Q2	Q4	Q4 + additional rail
20 x 150	Q1	Q2	Q4 + additional rail
30 x 150	Q2	Q2	Q4 + additional rail

DOUBLE-SKIN ZEPHIR EVOLUTION (ground floor)

Panel size H x L (cm)	**Vertical profiles centre-to-centre 600mm**
20 to 30 x 120	Q4

DOUBLE-SKIN ZEPHIR (ground floor)

Panel size H x L (cm)	**Vertical profiles centre-to-centre 600mm**
30 x 60	Q4

- Installation in seismic areas.

ZEPHIR

ZEPHIR AND Double-skin ZEPHIR (only for ground floor) wall cladding systems - maximum size 300x600mm - can be installed on an aluminium framework with 100mm brackets, in seismic areas and on building types as shown in the following table (according to Decree dated October 22nd, 2010, and revisions):

Seismic areas	Building class type			
	I	II	III	IV
1	O	O	O	O
2	O	O	X❶	X
3	O	X❷	X	X
4	O	X❷	X	X

O	Installation possible without specific provisions in the accepted field of application
X	Installation possible on flat, vertical concrete walls, according to the prescriptions of Appendix A
❶	Installation possible without specific provisions in the accepted field of application for one-floor schools (belonging to class type III) that meet the conditions of paragraph 1.1 of "Rules for seismic buildings – PS-MI 89 revision 92" (NF P06-014)
❷	Installation possible without specific provisions in the accepted field of application for buildings of class type II that meet the conditions of paragraph 1.1 of "Rules for seismic buildings – PS-MI 89 revision 92" (NF P06-014)

ZEPHIR and ZEPHIR EVOLUTION

ZEPHIR AND Double-skin ZEPHIR (only for ground floor) - maximum size 300x600mm – with a 100mm bracket, and ZEPHIR EVOLUTION and Double-skin ZEPHIR EVOLUTION (ground floor only) - maximum size 300x1200mm -, with a 200mm ISOLCO+ bracket, can be installed in areas and on building types as shown in the following table (according to Decree dated October 22nd, 2010, and revisions):

Seismic areas	Building class type			
	I	II	III	IV
1	O	O	O	O
2	O	O	X❶	X
3	O	X❷	X	X
4	O	X❷	X*	X*

O	Installation possible without specific provisions in the accepted field of application
X	Installation possible on flat, vertical concrete walls, according to the prescriptions of Appendix B
❶	Installation possible without specific provisions in the accepted field of application for one-floor schools (belonging to class type III) that meet the conditions of paragraph 1.1[1] of "Rules for seismic buildings – PS-MI 89 revision 92" (NF P06-014)
❷	Installation possible without specific provisions in the accepted field of application for buildings of class type II that meet the conditions of paragraph 1.1[1] of "Rules for seismic buildings – PS-MI 89 revision 92" (NF P06-014)
*	Installation prohibited for ZEPHIR

[1] *French Standard NF P06-014, paragraph 1.1, describes the field of application*

The ZEPHIR / ZEPHIR EVOLUTION wall cladding systems:

- On an aluminium framework on concrete walls or masonry, for panels at least 1200mm long and for double-skin panels on higher floors,
- Or on timber or steel frameworks on concrete wall or masonry,
- Or on timber framed building,

can be installed without specific provisions, in the accepted field of application, in seismic areas and on buildings of the following class types (according to Decree dated October 22nd, 2010, and revisions):

Seismic areas	Building class type			
	I	II	III	IV
1	O	O	O	O
2	O	O	❶	
3	O	❷		
4	O	❷		

O	Installation possible without specific provisions in the accepted field of application
❶	Installation possible without specific provisions in the accepted field of application for one-floor schools (belonging to class type III) that meet the conditions of paragraph 1.1 of "Rules for seismic buildings – PS-MI 89 revision 92" (NF P06-014)
❷	Installation possible without specific provisions in the accepted field of application for buildings of class type II that meet the conditions of paragraph 1.1 of "Rules for seismic buildings – PS-MI 89 revision 92" (NF P06-014)
	Installation prohibited

3. Components

ZEPHIR

With a 1.4cm thickness and a 24.5cm (module 25) or 29.5cm (module 30) height, ZEPHIR panels are available in lengths between 20 and 60cm.

ZEPHIR's surface density is 32kg/m² (±1).

ZEPHIR EVOLUTION

With a 1.4cm thickness and heights between 21 and 41cm (modules resp. 20 to 40cm), ZEPHIR EVOLUTION panels are available in lengths between 20 and 150cm depending on their height.

ZEPHIR EVOLUTION's surface density is 35kg/m² (±1).

Aspect and colours

ZEPHIR / ZEPHIR EVOLUTION are available in Red-orange, Champagne, Pearl Grey, Chocolate Brown, Ebony, Red, Violine, Sahara Beige, Dark Grey, Clay Grey, Stone, and Dune Pink. ZEPHIR / ZEPHIR EVOLUTION come with smooth, sanded, ridged, grooved and textured finishes. ZEPHIR / ZEPHIR EVOLUTION may be glazed or engobed.

ZEPHIR / ZEPHIR EVOLUTION are available in double-skin versions (see Fig. 1b and 2a).

Dimensional characteristics

The panels meet the specifications of French Standards NF EN ISO 10545, NF EN 771-1/CN and NF EN 539-2.

Sizes	ZEPHIR	ZEPHIR EVOLUTION
Height (mm)	245 to 295 (±3)	210 to 410 (±3)
Length (mm)	200 to 595 (±2)	200 to 1500* (±2)
Thickness (mm)	14 (±1)	14 (±1)

(*) depending on the height

Technical characteristics

- Load at failure per Standard NF EN ISO 10545-4, after a freeze-thaw cycle, following Method C of Standard NF EN 539-2 (sub-atmospheric pressure of 300mm Hg) :

	Size (cm)	Load at failure (daN)
ZEPHIR	24.5x59.5	≥ 40
	29.5x59.5	≥ 53
ZEPHIR EVOLUTION	21x59.5	≥ 32
	26x59.5	≥ 40
	31x59.5	≥ 53
	41x59.5	≥ 73

Tear strength control of the integral back side support bars, following the internal testing method validated by CERTIFIE**CSTB**CERTIFIED's certification procedures.

• Tear strength of the integral backside bar TERREAL internal procedure	• Tear strength of the integral backside bar CSTB procedure
• ≥ 70 daN (all formats)	• ≥ 35 daN (all formats)

Other technical features

- No persistent efflorescence (Standard NF EN 771-1/CN),
- Water absorption between 7% and 13% (Standard NF EN 10545-3),
- Expansion due to humidity < 1.6 mm/m (Standard NF EN ISO 10545-10),
- No surface grain damage (bursts) > 1 mm² (Standard NF EN 771-1/CN,
- No cracks on the front side of ZEPHIR / ZEPHIR EVOLUTION panels,
- No spalling > 1 cm² on the front side of panels,
- No cracks > 15 mm on the back side of ZEPHIR / ZEPHIR EVOLUTION panels,

3.1 Phoniceram and ZEPHIR EVOLUTION db, PERFORATED ZEPHIR EVOLUTION *(fig. 2)*

PHONICERAM (perforated ZEPHIR), PERFORATED ZEPHIR EVOLUTION and ZEPHIR EVOLUTION dB are used to make ventilation grids.

The perforations are oblong, of two types:

- Vertical perforations (fig. 2b).
- Horizontal perforations (fig. 2b).

PHONICERAM, PERFORATED ZEPHIR EVOLUTION and ZEPHIR EVOLUTION dB displays the same chemical, physical, dimensional characteristics and finishes as ZEPHIR / ZEPHIR EVOLUTION.

Phoniceram and PERFORATED ZEPHIR EVOLUTION / ZEPHIR EVOLUTION dB cannot be installed at ground level.

3.2 ZEPHIR aluminium fixing rails *(fig. 2a)*

Aluminium fixing rails sold by TERREAL are used to fasten ZEPHIR or PHONICERAM panels on the wall. Their dimensional characteristics are detailed on figure 2a.

These support rails are profiles made of extruded aluminium, grade 6060 R20. Two types are available, with a section of 42x22mm (5mm horizontal joint) or 54x22mm (XL rail, 12mm horizontal joint). The XL rail is not compatible with timber frameworks. They are sold in 3m long bars. The backside of the rails comprises small top and bottom ribs along the length to facilitate adequate contact on the support. Their front side is grooved to guide drilling and thus to properly position fastening elements.

Both types of support rails can be powder coated.

3.3 ZEPHIR EVOLUTION aluminium fixing rails

Aluminium fixing rails sold by TERREAL are used to fasten ZEPHIR EVOLUTION panels on the wall (see Fig. 1a).

These support rails are profiles made of extruded aluminium, grade 6060 R20. Two types are available, with a section of 74x23mm. They are sold in 2.99m long or 3.59m long bars. The backside of the rails comprises small top and bottom ribs along the length to facilitate adequate contact on the support. Their front side is grooved to guide drilling and thus to properly position fastening elements.

3.4 Framing components

3.41 Timber framework

The components of the secondary frame must comply with the specifications of CSTB Workbook 3316-V2.

- Facing width is minimum 40mm for timber vertical studs.
- Facing width is minimum 80mm for timber vertical studs at the wall's edges.

3.42 Metal framework

The fixed metal framework shall comply with the specifications of CSTB Workbook 3194, addendum 3585-V2:

The metal frame components can be made either of galvanised steel (min. coating Z 275) or of aluminium alloy.

The framework is made of:

- Steel: minimum grade S 220 GD
- Aluminium: series 3000 minimum, with elastic limit Rp0.2 at least 180MPa

The metal framework is installed in outside protected and ventilated environments.

The vertical profiles can be Omega, T , Z or L sections.

The facing width is minimum 40mm for vertical metal profiles.

The facing width for edge vertical profiles is minimum 80mm.

TERREAL sells a special T-section vertical profile equipped with a rubber gasket, dedicated to the ZEPHIR EVOLUTION system. This profile is used to accentuate the 5mm vertical joint between two ZEPHIR EVOLUTION panels or to keep water away from the joint. This profile is made of raw aluminium grade 6060 R20 (*see Fig. 3b and 4e*).

3.5 Fasteners

Fixing the aluminium rail on the framework is done with:

- On a timber framework: self-drilling stainless steel type A2 screws, Ø5.5x55mm, flat underside, which pullout resistance Pk is at least 170daN (determined according to French Standard NF P30-310);
- On a metal framework: stainless steel type A2 screws, Ø5.5x22mm, flat underside, which pullout resistance Pk from the metal support is at least 170daN (determined according to French Standard NF P30-310). The metal support is either steel (min. 15/10th) or aluminium (min. 25/10th).

3.6 Thermal insulation

ACERMI certified insulation, meeting the requirements of CSTB Workbooks 3316-V2 and 3586-V2.

4. Panel manufacturing

4.1 Production of ZEPHIR / ZEPHIR EVOLUTION panels

ZEPHIR / ZEPHIR EVOLUTION panels are produced at the Revel factory (31250 REVEL, France).

4.11 Raw materials

Clay comes from or is prepared at the ST PAPOUL quarry, located about ten kilometres north of Castelnaudary (FR-11490). Depending on the colour, clay from other quarries may be used.

4.12 Production process

1. Grinding (balancing grinder) in order to render the dry clay as fine as possible :
   - Adding degreasing sand with controlled grain size,
   - Adding colour additives,
   - Blending using electronic weighing.
2. Wetting the blend.

3. Shaping and extrusion of the clay paste (monitoring the drawing pressure and humidity).
4. The products are dried, and fired in fully automated kilns,
5. After firing, the products are cut and packaged.

4.2 Production of PHONICERAM

PHONICERAM panels are produced at the Revel factory (31250 REVEL, France), by perforating ZEPHIR panels with a water-jet cutting machine.

4.3 Production of the fixing rails

The fixing rails are made using extruded aluminium grade 6060 R20.

5. Quality Assurance

5.1 Quality assurance for raw materials

Certificate of manufacturer compliance, with analysis report for each batch in compliance with the Specifications, including:

- Clay and sand: grain size,
- Blend: grain size

5.2 Production monitoring

- Production parameters,
- Dimensions before drying (wet state),
- Humidity of the blend after drying (once per day),
- Dimensions and planarity after drying (once per day),

5.3 Inspection of finished products

By production run and random sampling

Dimensional checks based on product technical sheet (established by TERREAL) and French Standard NF EN 10545-2 §2.

By production run, and random sampling once per week

- Test according to French Standard NF EN ISO 10545-3:
  - Checks on water absorption: between 7 and 13%
- Internal test method based on Standard NF EN 771-1/CN:
  - Checks on efflorescence
- Checks on backside bars tear strength with internal test method validated as part of the CERTIFIE CSTB CERTIFIED certification
  - Tear strength ≥ 70 daN (see Table 2)
- Test according to Standard NF EN ISO 10545-10:
  - Expansion due to humidity < 1.6 mm/m

By production run, and random sampling once per quarter

- Test according to French Standard NF EN ISO 10545-10:
  - Load at failure (see Table 3)
- Test according to French Standard NF EN 539-2 (Alternate Method):
  - Check frost resistance: 50 freeze-thaw cycles,
- Test according to French Standard NF EN ISO 10545-10 before and after freeze-thaw cycle:
  - Load at failure (see Table §3)

By random sampling once in the product's lifetime

- Test according to French Standard NF EN 539-2:
  - Check frost resistance: 150 level 1 freeze-thaw cycles,
- Test according to French Standard NF EN ISO 10545-10 before and after freeze-thaw cycle:
  - Load at failure (see Table 3)

5.4 Quality assurance for fixing rails

For each production batch:

- Raw material certificate and product's certificate of conformity

6. Identification

Terracotta products that have been granted a CERTIFIE CSTB CERTIFIED Certificate can be identified by a mark complying with §6.3, chapter 1, of "Special requirements of CERTIFIE CSTB CERTIFIED Certification for wall-cladding, insulated wall-cladding and wall-facing, and soffit products", including:

On the product

- The CERTIFIE CSTB CERTIFIED logo,
- The certificate number,
- The production batch identification.

On the pallets

- The CERTIFIE CSTB CERTIFIED, logo,
- The certificate number,
- The manufacturer's name, the identification of the production plant,
- The system's commercial name, and the product's commercial name,
- The Technical Assessment number.

7. Procurement

The products supplied by TERREAL include ZEPHIR / ZEPHIR EVOLUTION panels, support rails and vertical framework profiles fitted with rubber joints.

All other parts, i.e. fasteners, insulation panels, sub-frame components and folded metal trims are directly supplied by the contractor, in compliance with the prescriptions that are provided in the present document.

8. Installation

8.1 Preparations

TERREAL does not install any product. However, it has a technical support department that may, when requested by the contractor, provide technical assistance, both at the design stage of a project and at the start of its execution phase.

8.2 General installation guidelines

8.21 ZEPHIR / ZEPHIR EVOLUTION layout plan

A layout shall be prepared in advance in order to identify irregular points and determinate where cuts are to be made.

- Module with 36x22 rail:
  - 250 x 600mm for ZEPHIR 24.5 x59.5cm
  - 300 x 600mm for ZEPHIR 29.5 x 59.5cm
- Module with XL rail:
  - 261 x 600mm for ZEPHIR 24.5 x 59.5cm
  - 311 x 600mm for ZEPHIR 29.5 x 59.5cm
- Module for ZEPHIR EVOLUTION with 75x24 rail:
  - 200 x 600mm for ZEPHIR EVOLUTION 21 x 59.5cm
  - 250 x 1,200mm for ZEPHIR EVOLUTION 26 x 119.5cm
  - 300 x 1,200mm for ZEPHIR EVOLUTION 31 x 119.5cm
  - 400 x 1,200mm for ZEPHIR EVOLUTION 41 x 119.5cm
  - 200 x 1,500mm for ZEPHIR EVOLUTION 21 x 149.5cm
  - 300 x 1,500mm for ZEPHIR EVOLUTION 31 x 149.5cm

For direct installation on timber frameworks, the planarity of the supporting wall shall not present a deviation of more than 5mm per 200mm and 10mm per 2m (due to defects such as bumps, various irregularities).

The planarity shall be mentioned in the tender documents.

8.22 Cutting cladding elements

The contractor will use a table saw (water cooled saw, if possible) and be equipped with a blade for ceramic materials. According to the layout, the ZEPHIR / ZEPHIR EVOLUTION can be cut perpendicularly to:

- The width, with a minimum width of 120 mm
- The height, leaving two holding bars at a minimum (one top and one bottom).

8.23 Fixing the support frame

The aluminium rail supporting the ZEPHIR panels is fixed to a framework.

This secondary framework can be fastened to the substrate either directly or using fixing brackets if a continuous insulation is installed (these brackets

make space for the insulation material and help adjust the verticality of the framework's vertical tracks).

8.231 Timber framework

The installation of a timber framework must comply with the technical specifications of *CSTB Workbook* 3316-V2, completed by the following:

- The co-planarity of the vertical studs shall be verified between adjacent studs, with a maximum allowed deflection of 2mm, which can only be achieved if studs that are not straight enough are rejected,
- Timber studs shall have a mechanical resistance corresponding at least to class C18 of French Standard NF EN 338, and a durability (natural or by treatment) of class No. 2, with protective strip, or class No. 3b, per Standard FD P 20-651,
- At the time of installation, the humidity of timber studs and battens shall not exceed 18%, with a 4% maximum difference between two elements. The humidity level shall be determined following the method described in French Standard NF EN 13183-2 (using a timber moisture meter),
- The admissible resistance of the bracket to vertical loads to take in account must correspond to a deformation under load equal to 1mm,
- The maximum centre-to-centre distance of the vertical studs is 900 mm for ZEPHIR and 1,200mm for ZEPHIR EVOLUTION,
- For direct installation on a timber framework, the planarity of the support wall shall not present a deviation of more than 5mm per 200mm and 10mm per 2m (due to defects such as bumps, various irregularities). The planarity shall be mentioned in the tender documents.

8.232 Metal framework

The installation must comply with the specifications of *CSTB Workbook* 3194, completed by the following:

- The co-planarity of the vertical tracks shall be verified between adjacent profiles, with a maximum allowed deflection of 2mm.
- Test shall be conducted on the fixing brackets, taking into account a deformation under vertical loads equal to 1mm.
- The maximum centre-to-centre spacing of the vertical support profiles:
  - ZEPHIR: 900mm,
  - ZEPHIR EVOLUTION: 1,200mm,
  - ZEPHIR with XL rail: 600mm.

The installation requires a calculation prepared by the contractor, with TERREAL's assistance if necessary.

8.24 Installing the ZEPHIR aluminium support rails.

Following the layout plan, the installation contractor with draw the vertical spacing on the supports, in compliance with the laying module indicated on the pallets.

Nonetheless, the contractor will check when fixing each rail that the horizontal joint measures between 4 and 7 mm.

The following are required for proper fastening of the rails:

- The use of a laying guide (to adjust the centre-to-centre spacing between two horizontal rails) and of a level guarantees the rails are correctly spaced and horizontal,
- The maximum length of the cantilever of the rail from the last fastener on the wall is 15cm,
- A 10 to 20 mm gap must be preserved between adjacent rails to allow for expansion of the elements and evacuation of possible water runs.

8.25 Installing the ZEPHIR EVOLUTION aluminium support rails.

Following the layout plan and the module, the contractor with draw the vertical spacing lines on the supports.

The centre-to-centre distance between horizontal support rails is:

- 200mm for ZEPHIR EVOLUTION 20,
- 250mm for ZEPHIR EVOLUTION 25,
- 300mm for ZEPHIR EVOLUTION 30,
- 400mm for ZEPHIR EVOLUTION 40.

The following are required for proper fastening of the rails:

- The use of a laying guide (to adjust the centre-to-centre spacing between two horizontal rails) and of a level guarantees the rails are correctly spaced and horizontal,
- The maximum length of the admissible cantilever of the rail from the last fastener on the wall is 30cm,
- A 10 to 20 mm gap must be preserved between adjacent rails to allow for expansion of the elements and evacuation of possible water runs.

8.3 Installing field ZEPHIR / ZEPHIR EVOLUTION panels (*Fig. 5a to 5b*)

The ZEPHIR / ZEPHIR EVOLUTION panels are laid in line, hanged on the fixing rails. The top integral support backside bar of the ZEPHIR / ZEPHIR EVOLUTION panel hangs on the lower flange of the upper rail, while the bottom support bar hangs on the upper flange of the lower rail. In order to avoid any loosening of the ZEPHIR / ZEPHIR EVOLUTION panels, the laying module must comply with instructions to leave a play of 1 to 3 mm between the bottom holding bar of the ZEPHIR / ZEPHIR EVOLUTION panel and the upper flange of the lower rail. In order to avoid vibrations caused by wind and to keep the ZEPHIR / ZEPHIR EVOLUTION panel in place in case of damage, it is recommended to put polyurethane mastic paste type Sikaflex 11FC beads at the contact between ZEPHIR / ZEPHIR EVOLUTION's bottom support bar and the rail's upper flange (see Fig. 26).

The following joint widths between products must be observed:

- Horizontal joints: 5mm (+2mm / -1mm) for ZEPHIR or 15mm (+2mm/ -1mm) for ZEPHIR with XL rail, or 10mm. (+2mm / -1mm) for ZEPHIR EVOLUTION,
- Vertical joints (straight or staggered): 5mm (± 1.5mm) for ZEPHIR / ZEPHIR EVOLUTION.

To guarantee the Q3 and Q4 ratings for impact load resistance of ZEPHIR / ZEPHIR EVOLUTION panels laid at ground level and thus exposed to potential impacts, it is necessary to install an additional rail fixed at half-height of the ZEPHIR / ZEPHIR EVOLUTION panels, and a vertical stud every 30cm (see Fig. 4f).

Double-skin ZEPHIR EVOLUTION may be used at ground level. In that case, the centre-to-centre distance between vertical profiles of the framework is 60cm, and it is not necessary to install additional horizontal rails.

If a Q4 rating is required when installing ZEPHIR panels, it is necessary to use double-skin panels (see Fig 2a and 8b).

8.4 Dealing with irregular points

Dealing with irregular points is detailed in Figures 8 to 24b.

8.41 External corners (*see Fig. 17, 23a and 23b*)

External corners are dealt with by assembling two ZEPHIR panels. This assembly requires cutting the support bars of the overlapping ZEPHIR / ZEPHIR EVOLUTION panel by 20mm, on site. A 2 mm clearance is required at the overlap. In order to avoid vibrations caused by wind at the corner, it is necessary to put two Sikaflex 11FC mastic points at both the top and bottom of the overlap.

8.42 Internal corners (*see Fig. 11*)

Re-entrant corners are dealt with by placing the abutting ZEPHIR / ZEPHIR EVOLUTION panel close enough to the other panel while keeping a 5 mm joint between the two ZEPHIR / ZEPHIR EVOLUTION panels.

8.43 Base detail: first row (*see Fig. 13 and 19*)

At the base of the wall, it is recommended to start with a full-size ZEPHIR panel. However, depending on the layout plan, it is possible to start with a cut ZEPHIR panel, as specified on figure 13.

A perforated metal sheet allowing ventilation of the air space shall be fixed underneath the wall-cladding system.

8.44 Wall top detail: parapet (*see Fig. 9*)

At the top end of the wall, the ZEPHIR / ZEPHIR EVOLUTION system must be protected using an overlapping waterproof flashing. The last ZEPHIR / ZEPHIR EVOLUTION panel can be full or cut depending on the chosen layout. The ZEPHIR / ZEPHIR EVOLUTION panels are installed on the rails using the panels' top support bar, or the middle bar if the panels were cut.

8.45 Dealing with openings (see Fig. 14 to 16 and 20 to 22b)

As a general rule, the junction between ZEPHIR / ZEPHIR EVOLUTION panels and joinery is dealt with metal frames fixed to the bearing structure or to the secondary framework, and either overlapping or touching the panels.

However, it is possible to use more traditional finishing:

- At the sill and the head, using metal flashings (*see Fig. 14, 15, 20 and 21*),
- At the jambs (*see Fig.16, 22a and 22b*), the junction between the two ZEPHIR / ZEPHIR EVOLUTION panels is dealt with in the same way as for the external corner (*see §8.41*). A U-section profile must be put in place to hold the ZEPHIR / ZEPHIR EVOLUTION panel against the joinery (*see fig. 15*),
- When using metal pre-frames, the finish is made by the pre-frame itself. It will be necessary to dimension the pre-frame depending on the clearance left by the wall-cladding.

Pre-frames and joinery shall be installed in compliance with the related Codes or Technical Assessments.

8.46 Dealing with expansion joints (*see Fig. 10*)

Support rails must not go across expansion joints on the bearing wall. As a consequence, there must be a vertical profile of the framework at both sides of the expansion joint. In addition, ZEPHIR / ZEPHIR EVOLUTION panels must be installed on one rail only, and can overlap the expansion joint in compliance with the rules expressed at 8.24 limiting the cantilever.

8.5 Installing Phoniceram or Perforated ZEPHIR EVOLUTION

Installation of Phoniceram (for ventilation grids) is identical to installing ZEPHIR / ZEPHIR EVOLUTION.

A reinforcement Z or Ω section profile completes the fastening.

Phoniceram has only two backside support bars – top bar and bottom bar – and thus cannot be cut on site perpendicularly to the height.

8.6 Installation on walls exposed to impacts (*see Fig. 4f*)

A half-rail is available for use at the first row (at the wall's base), or as reinforcement against impacts. Its section is 45x23mm, and it is sold in 2.99m or 3.59m long bars.

Support profiles also exist in powder coated finishes.

9. Installation on Timber Framed Buildings (*see Fig. 25 to 29*)

The Timber Framed Building's wall complies with code DTU 31.2, limited to:

- Maximum height: 9m (+ gable) in locations type a, b or c,
- Maximum height: 6m (+ gable) in locations type d.

A centre-to-centre distance between supports equal to 645mm must be used for the layout.

A water/moisture barrier complying with DTU 31.2 shall be installed on the external wall.

The water barrier shall be cut every 6m to shed water to the outside.

A 20mm ventilated air space must be secured.

50x20mm battens complying with CSTB Workbook 3316-V2 are fixed in front of the timber framed building's studs by Ø7x50mm timber screws with a 598 daN characteristic pullout resistance (Pk).

The ZEPHIR / ZEPHIR EVOLUTION horizontal rails are fastened on the timber battens with Ø6.3x38mm bi-metal screws, like DRILLNOX BOIS.

The frame shall be split at every level.

In locations type a, b and c: braced wall panels of the timber framed building may be placed either inside or outside walls.

In locations type d: braced wall panels of the timber framed building must be placed outside walls

10. Maintenance and repair

10.1 Cleaning

TERREAL offers a procedure to clean its products. Potential dirt may be dust (from sawing and/or storage), oil stains (handling of support rails), lichen (wrong fitting at irregular points), and efflorescence (calcium in clay). Each case requires a specific cleaning method described in the cleaning procedures.

10.2 Replacing an accidentally damaged ZEPHIR / ZEPHIR EVOLUTION panel

Any ZEPHIR / ZEPHIR EVOLUTION panel that is accidentally broken can be replaced easily and independently from adjacent ZEPHIR / ZEPHIR EVOLUTION panels. The replacement is done by following these steps:

- Remove the broken ZEPHIR / ZEPHIR EVOLUTION panel,
- On the replacement ZEPHIR / ZEPHIR EVOLUTION, reduce by 4 mm the "lug" of the bottom support bar, along its whole length; this must be carried out using a circular blade.
- Put a continuous line of mastic paste type Sikaflex 11FC inside the groove of the replacement panel's bottom support bar. This mastic line ensures proper contact between the bottom support bar and the upper flange of the support rail.
- Position the new ZEPHIR / ZEPHIR EVOLUTION panel.

B. Test results

- Wind performance tests:
  - ZEPHIR: Wind performance test – CSTB Report No.CL02-077 (July 23rd, 2002), CL02-130 (November 20th, 2002), and CL05-118 (December 14th, 2005),
  - ZEPHIR 25: Wind performance test – CSTB Report No.CLC09-26018890/C (May 18th, 2009),
  - ZEPHIR EVOLUTION 30: Wind performance test – CSTB Report No.CLC 12-26040326 (February 2nd, 2015),
  - ZEPHIR EVOLUTION 20, 25, 30, 40: Wind performance test – CSTB Report No.14-26054181 (February 2nd, 2015)
- Impact performance tests:
  - ZEPHIR: Impact performance test – CSTB Report No.CL02-077 (July 23rd, 2002) and CL02-130 (November 20th, 2002),
  - ZEPHIR 25: Impact performance test – CSTB Report No.CL09-26018891/B (May 18th, 2009),
  - ZEPHIR 30: Impact performance test – CRED Report No.CL11-001 (February 18th, 2011 – test made on Terreal's impact test bed in the presence of CSTB's representatives)
  - ZEPHIR EVOLUTION 30: Impact performance test – Report No.CLC12-26040327 (January 22nd, 2013),
  - ZEPHIR EVOLUTION 20, 25, 30, 40: Impact performance test – CSTB Report No.CLC14-26254180 (January 15th, 2015),
  - Double-skin ZEPHIR EVOLUTION 20 and 30: Impact performance test – Report No.CLC15-26055127 (February 27th, 2015)
- Seismic tests:
  - "Test report on the seismic performance of the ZEPHIR wall cladding system" No. EEM 06 26002763 (November 21st, 2006),
  - Study report titled "Computation of seismic loads in anchors used to fix the ZEPHIR system to the support" – DER/CLC-07-089 (January 22nd, 2008),
  - Test report No. ES 552-05-1178 (January 3rd, 2005),
  - Seismic performance tests for ZEPHIR and ZEPHIR EVOLUTION No. MRF 13 2600477764/A (January 27th, 2014),
  - Study report titled "Computation of seismic loads in anchors used to fix the ZEPHIR and ZEPHIR EVOLUTION systems to the support" No. DCC/CLC-15-358 (March 17th, 2015)

C. References

C1 Environmental data[2]

ZEPHIR and ZEPHIR EVOLUTION are subject to an Environmental Statement (DE).

This Statement was issued on June 15th, 2005 by TERREAL. It has not been verified by a third party under the INIES program for Environment and Health Statements. It has been filed on the following website: www.declaration-environnementale.gouv.fr.

C2 Other references

The ZEPHIR wall cladding system (previously called ACCRODAL-ZEPHIR) has a 25 year feedback.

Since 2008, about 130,000m² of ZEPHIR panels have been installed in France.

Since 2012, about 15,000m² of ZEPHIR EVOLUTION panels have been installed in France.

[2] *Specialized Group No.2 has not examined this data under the scope of this assessment.*

Technical File's tables and figures

Table 1: Panels' characteristics

Panels	Dimensions h x L x 1.4 (cm)	Colours	Skin	Weight (kg / unit)	Weight (*) (kg/m²)	Quantity (*) (units/m²)	Aluminium Rail (ml/m2)
ZEPHIR	29.5x59.5	Champagne Dune Pink Red Orange Red Violine Stone Clay Grey Storm Grey Sahara Beige Pearl Grey Dark Grey Chocolate Brown	Smooth Sanded Ridged Glazed	5.8	32	5.4	3.5
	24.5x59.5			4.7	32	6.67	4
ZEPHIR EVOLUTION	21x119.5/149.5		Smooth Sanded Ridged Grooved Glazed	4.2	35	8.33	5
	26x119.5/149.5			10.5	35	3.33	4
	31x119.5/149.5			12.6	35	2.77	3.5
	41x119.5			16.8	35	2.08	2.5

h = height; L = length

(*)The quantities were established for 5mm vertical and horizontal joints.

Table 2: Production control

Control designation	Control's frequency
1 – Raw materials	
1.1 Controls on raw materials 1.2 Controls on rails (raw material certificate and certificate of conformity)	For each delivery For each delivery
2 – Production parameters: blend and paste → Controls during manufacturing	
2.1 Blend preparation parameters	Automatic (process)
2.2 Controls on blend preparation parameters	Once per batch
3 – Controls on finished products	
3.1 Controls on aspect and dimensions Skin aspect and possible defects Length and height Flatness and wedging Installation functionality	Once per pallet
3.2 Controls on physical and mechanical characteristics • Water absorption (NF EN ISO 10545-3) • Flexural strength (NF EN ISO 10545-4): ○ ZEPHIR ▪ ZEPHIR 25: ≥40 daN ▪ ZEPHIR 30: ≥53 daN ▪ Double-skin ZEPHIR 25: ≥120 daN ▪ Double-skin ZEPHIR 30: ≥150 daN ○ ZEPHIR EVOLUTION ▪ ZEPHIR EVOLUTION 20: ≥32 daN ▪ ZEPHIR EVOLUTION 25: ≥40 daN ▪ ZEPHIR EVOLUTION 30: ≥53 daN ▪ ZEPHIR EVOLUTION 40: ≥73 daN ▪ Double-skin ZEPHIR EVOLUTION 20: ≥90 daN ▪ Double-skin ZEPHIR EVOLUTION 30: ≥150 daN • Frost resistance (NF EN 539 and flexural strength after freezing cycle) • Tear strength of the backside bars: ○ Internal method: ≥70 daN ○ CERTIFIE CSTB CERTIFIED rules: ≥35 daN	Once per production batch Once per production batch Once per product/colour/semester

List of figures

Components **14**

Figure 1a – ZEPHIR EVOLUTION 20, 25, 30, 40, and 30 Twin 14
Figure 1b – ZEPHIR EVOLUTION 20, and double-skin ZEPHIR EVOLUTION 30 15
Figure 2a – ZEPHIR 25, 30, and double-skin ZEPHIR 30 16
Figure 2b – PERFORATED ZEPHIR EVOLUTION 30, and ZEPHIR Phoniceram 17
Figure 3a – Vertical framework profile 18
Figure 3b – T-section profile 18

Application **19**

Figure 4a – Installation of ZEPHIR EVOLUTION with straight joints 19
Figure 4b – Installation of ZEPHIR EVOLUTION with staggered joints 19
Figure 4c – Installation of ZEPHIR with straight joints 20
Figure 4d – Installation of ZEPHIR with staggered joints 20
Figure 4e – Installation of ZEPHIR EVOLUTION with straight joints + vertical waterproofing joint 21
Figure 4f – Installation of ZEPHIR EVOLUTION with additional horizontal rail 21

Figures common to timber and metal frameworks **22**

Figure 5a – ZEPHIR EVOLUTION field panels – Side view 22
Figure 5b – ZEPHIR field panels – Side view 23
Figure 5c – Laying accessory 24
Figure 6a – ZEPHIR EVOLUTION – Section – Side wiew 25
Figure 6b – ZEPHIR– Section – Side view 25
Figure 7a – Installation of ZEPHIR EVOLUTION field panel – Top view 26
Figure 7b – Installation of ZEPHIR EVOLUTION field panel with vertical waterproofing gasket– Top view 26
Figure 8a – Double-skin ZEPHIR EVOLUTION / ZEPHIR – Side and top views 27
Figure 8b – ZEPHIR EVOLUTION / ZEPHIR – Ground floor - Side and top views 28
Figure 9 – ZEPHIR EVOLUTION / ZEPHIR – Parapet – Side view 29
Figure 10 – ZEPHIR EVOLUTION / ZEPHIR – Expansion joint – Top view 30
Figure 11 – ZEPHIR EVOLUTION / ZEPHIR – Internal corner 30
Figure 12 – ZEPHIR EVOLUTION / ZEPHIR –Splitting the air space – Side view 31

Figures for installation on timber frame **32**

Figure 13 – ZEPHIR EVOLUTION / ZEPHIR – Wall base with timber framework 32
Figure 14 – ZEPHIR EVOLUTION / ZEPHIR – Window sill with timber framework 32
Figure 15 – ZEPHIR EVOLUTION / ZEPHIR – Window head with timber framework 33
Figure 16 – ZEPHIR EVOLUTION / ZEPHIR –Jambs with timber framework 33
Figure 17 – ZEPHIR EVOLUTION / ZEPHIR – External corner with timber framework 34
Figure 18a – ZEPHIR EVOLUTION – Splitting the frame (timber framework) – Length ≤ 5.4m 34
Figure 18b – ZEPHIR – Splitting the frame (timber framework), with flashing – 5.4m ≤ Length ≤ 11m 35

Figures for installation on metal frame **36**

Figure 19 – ZEPHIR EVOLUTION/ ZEPHIR – Wall base – Side and top views 36
Figure 20 – ZEPHIR EVOLUTION / ZEPHIR – Window sill – Side wiew 37
Figure 21 – ZEPHIR EVOLUTION / ZEPHIR – Window head – Side view 37
Figure 22a – ZEPHIR EVOLUTION / ZEPHIR – Window jamb with metal surround – Top view 38
Figure 22b – ZEPHIR EVOLUTION / ZEPHIR – Terracotta window jamb – Top view 38
Figure 23a – ZEPHIR EVOLUTION / ZEPHIR – External mitred corner – Top view 39
Figure 23b – ZEPHIR EVOLUTION / ZEPHIR – External corner with corner section – Top view 39
Figure 24a – ZEPHIR EVOLUTION / ZEPHIR – Splitting the framework – Side view 40

Figure 24b – ZEPHIR EVOLUTION / ZEPHIR – Splitting the framework + flashing – Side view 41

Figures for installation on timber framed buildings 42

Figure 25 – ZEPHIR EVOLUTION/ ZEPHIR – Field panels – Top view 42
Figure 26 – ZEPHIR EVOLUTION/ ZEPHIR – Detail at floor lever – Side view 43
Figure 27 – ZEPHIR EVOLUTION/ ZEPHIR – External corner with timber framed building – Top view 44
Figure 28a – ZEPHIR EVOLUTION/ ZEPHIR – Wall base detail on timber framed building – Side view 44
Figure 28b – ZEPHIR EVOLUTION/ ZEPHIR – Wall base with double-skin panel – Side view 45
Figure 29 – ZEPHIR EVOLUTION/ ZEPHIR – Splitting the sub-frame on a timber framed building, with or without flashing, and cutting the moisture barrier 46

Appendices A and B - Installation in seimic areas

Figure A1 – Installation - General rule 49
Figure A2 – Splitting the framework at floor level 50
Figure A3 – ZEPHIR horizontal support rail 51
Figure A4 – Brackets 52
Figure A5 – Stop profile 52
Figure A6 – Corner profile – Option 1 53
Figure A6bis – Corner profile – Option 2 53
Figure A7 – Internal corner 54
Figure A8 – Stop profiles at expansion joint 55
Figure A9 – Window jamb – Option 1 56
Figure A9bis – Window jamb – Option 2 57
Figure B1 – Framework’s bracket and vertical profile 60
Figure B2 – Splitting the framework at floor level 61
Figure B3 – Stop profile 62
Figure B4 – Stop profile at edge 62
Figure B5 – External corner 63
Figure B6 – Internal corner 64
Figure B7 – Expansion joint – between 12 and 15cm 65

Components

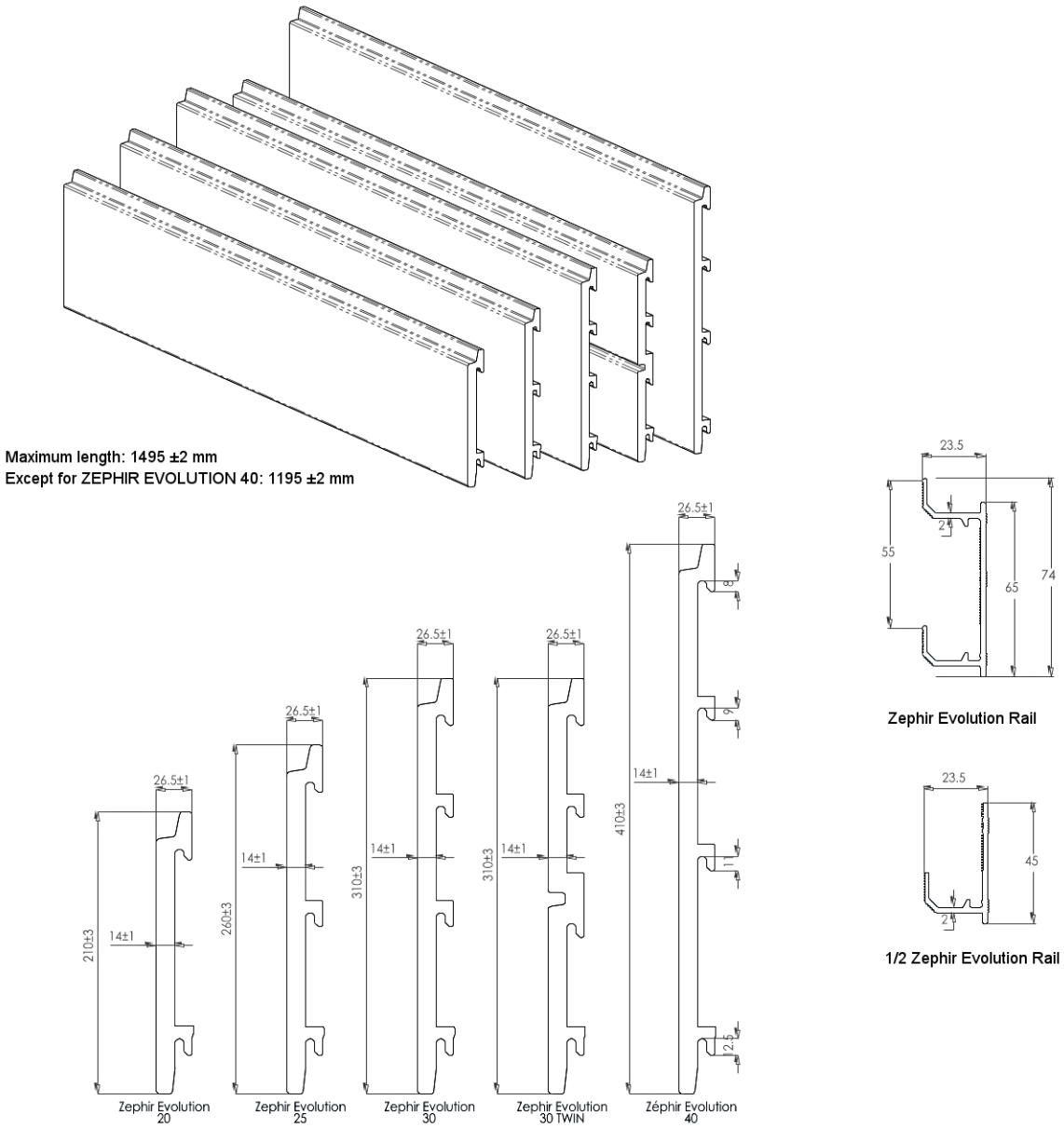

Figure 1a – ZEPHIR EVOLUTION 20, 25, 30, 40, and 30 Twin

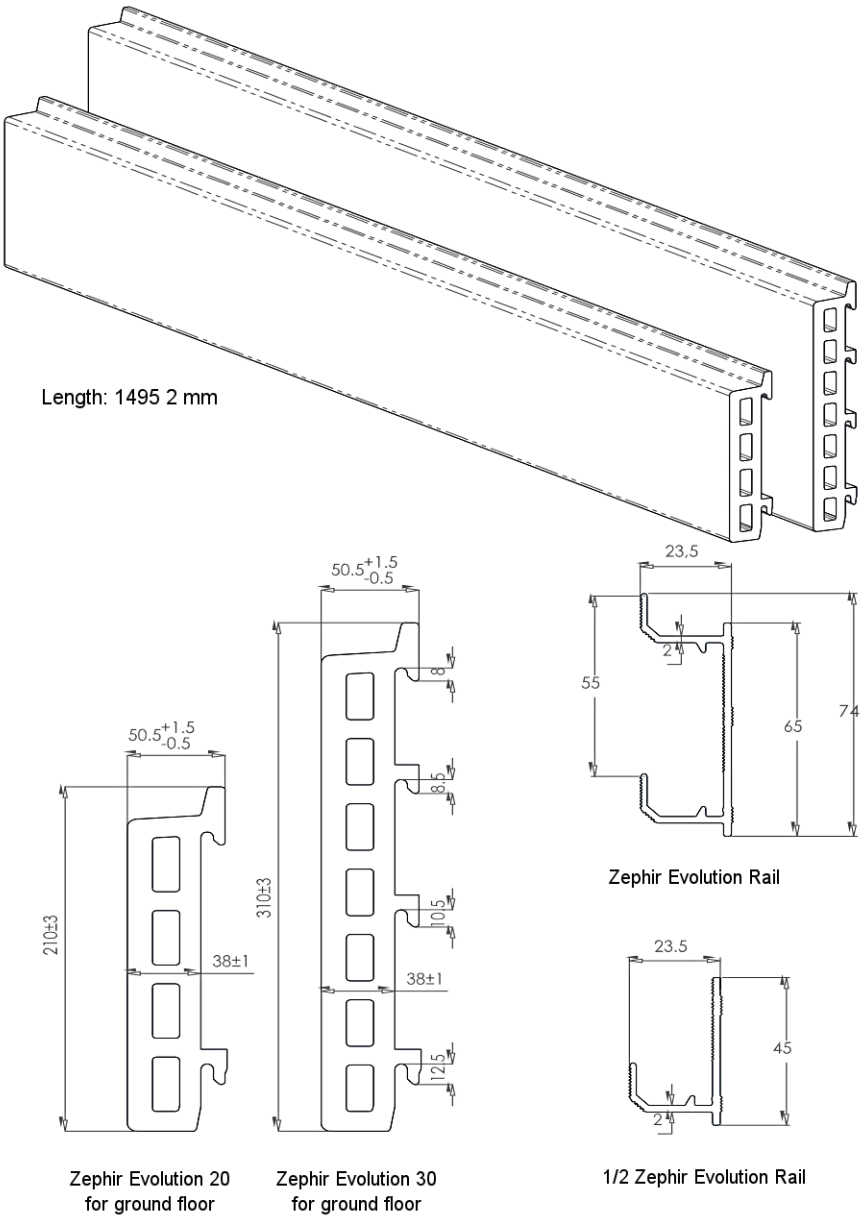

Figure 1b – ZEPHIR EVOLUTION 20, and double-skin ZEPHIR EVOLUTION 30

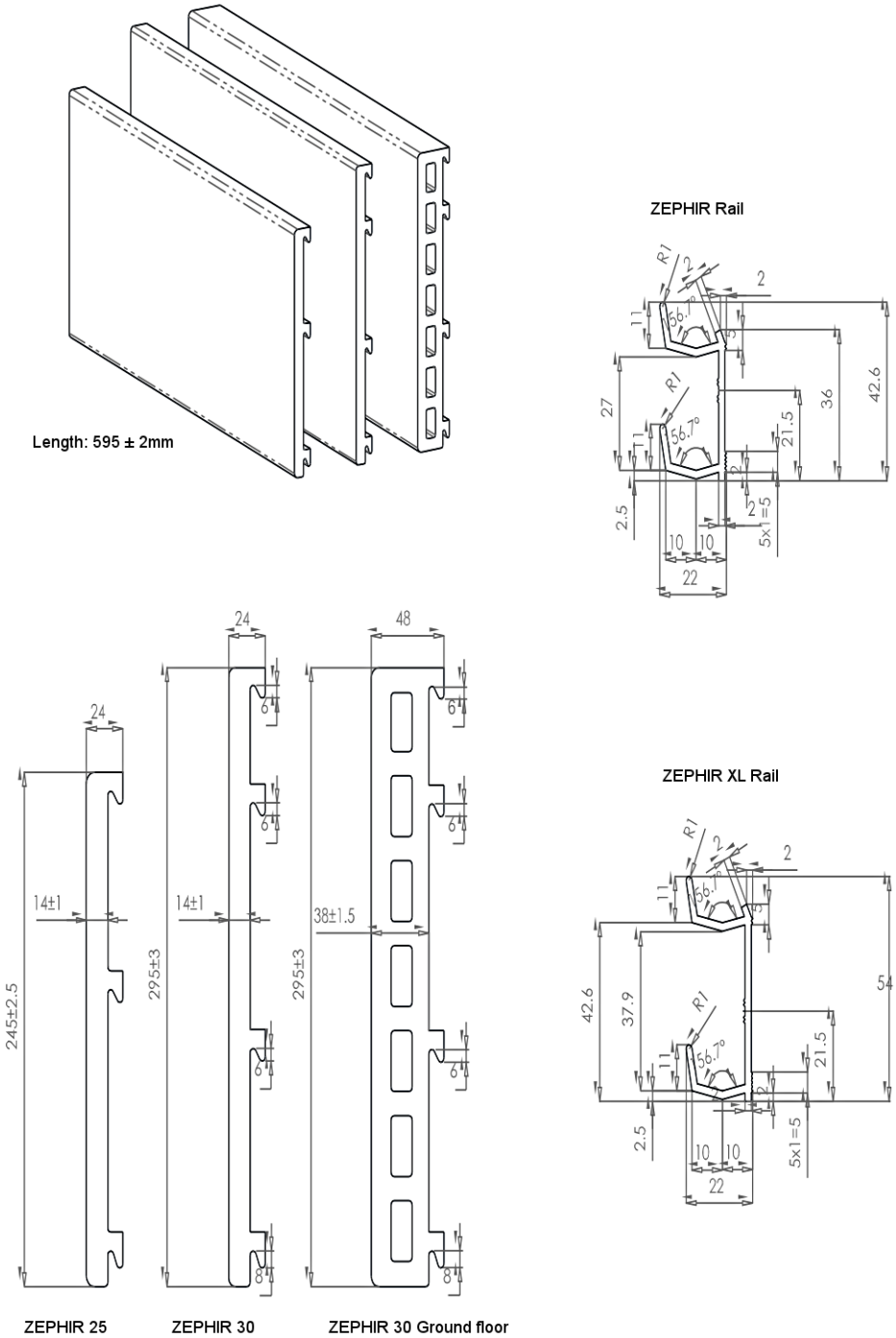

Figure 2a – ZEPHIR 25, 30, and double-skin ZEPHIR 30

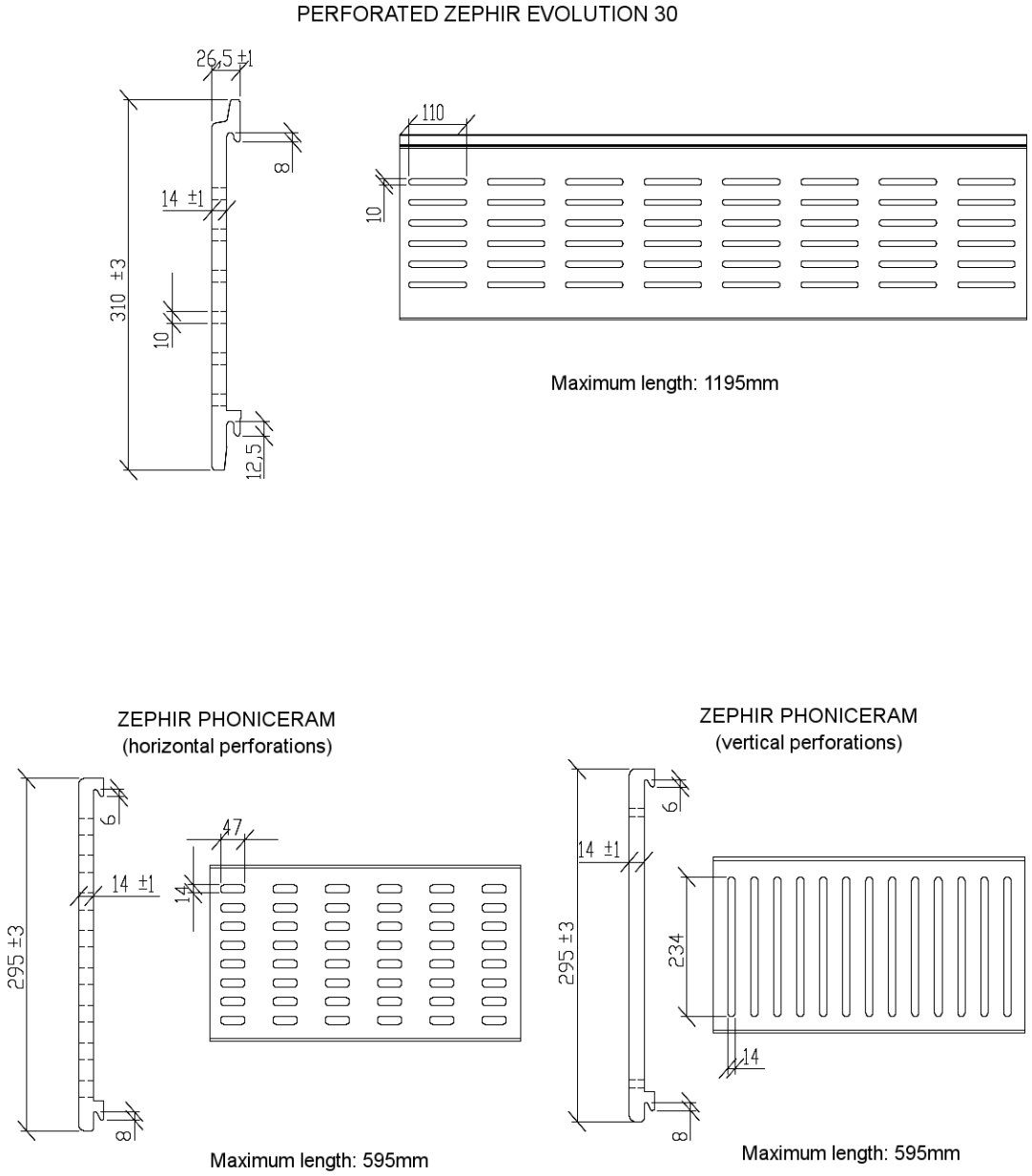

Figure 2b – PERFORATED ZEPHIR EVOLUTION 30, and ZEPHIR Phoniceram

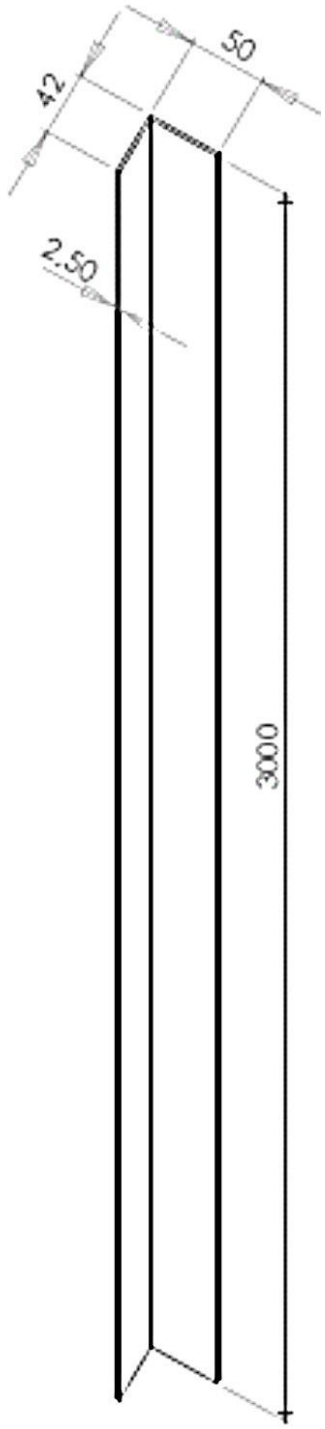

Figure 3a – Vertical framework profile

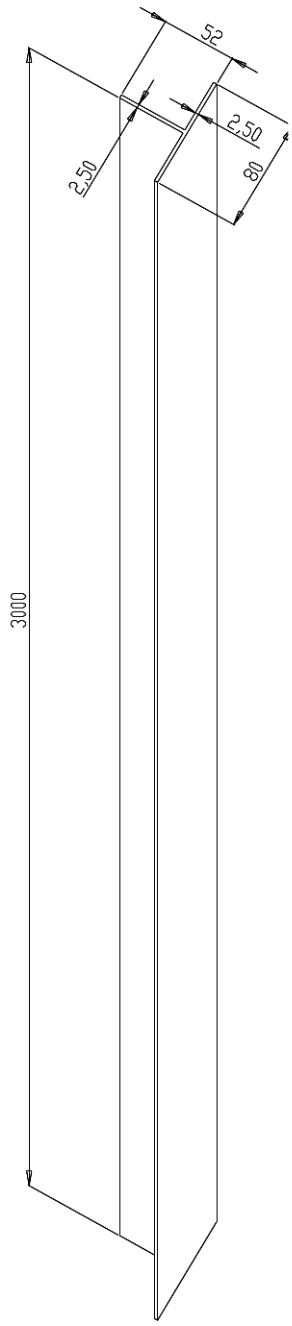

Figure 3b – T-section profile

Application

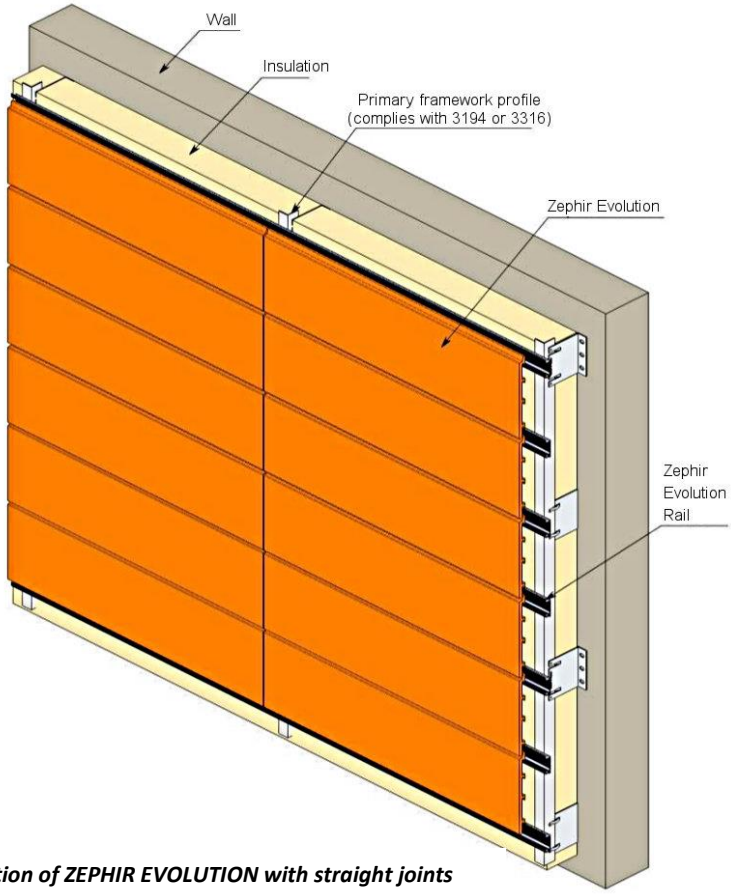

Figure 4a – Installation of ZEPHIR EVOLUTION with straight joints

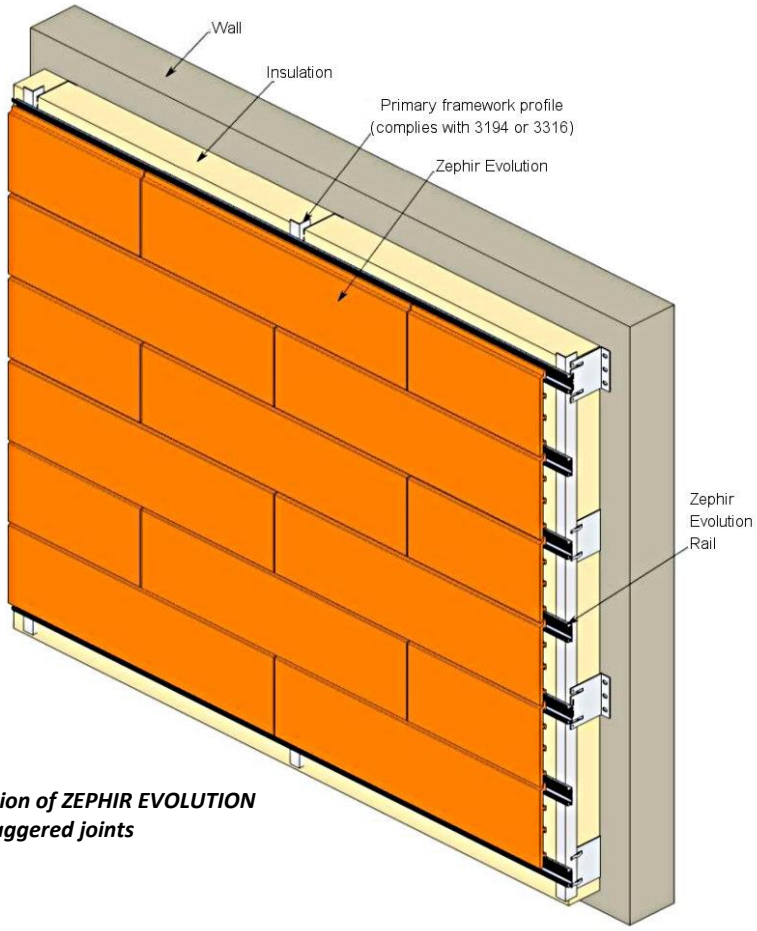

Figure 4b – Installation of ZEPHIR EVOLUTION with staggered joints

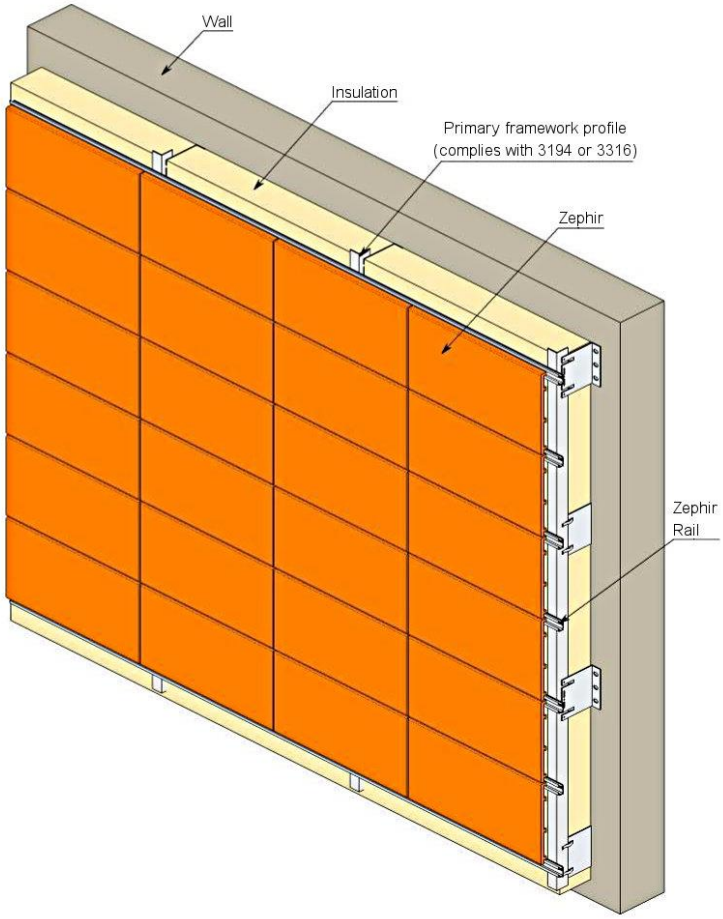

Figure 4c – Installation of ZEPHIR with straight joints

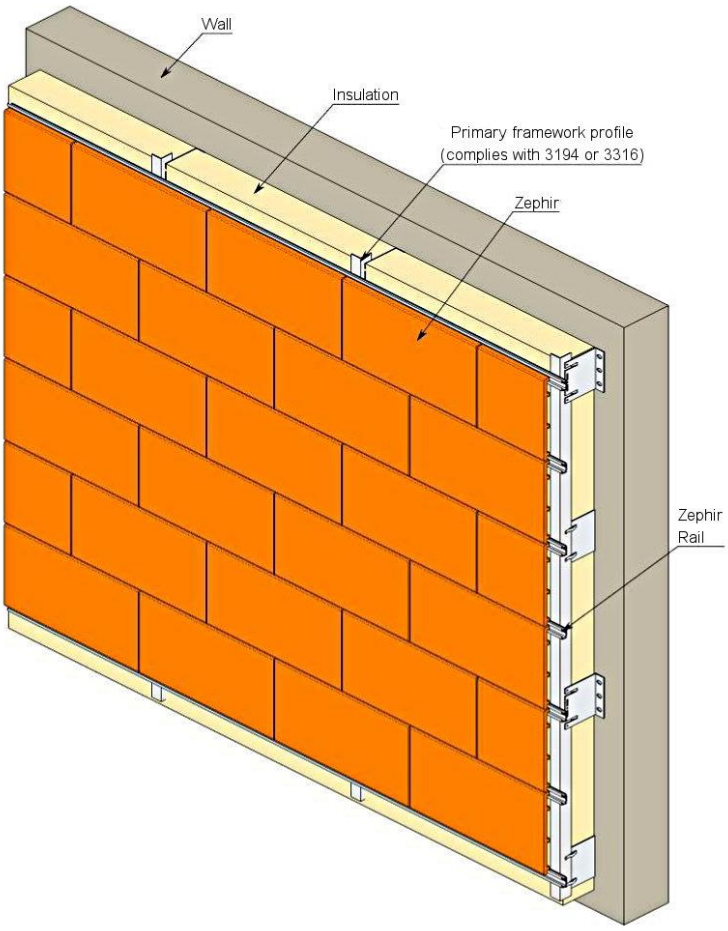

Figure 4d – Installation of ZEPHIR with staggered joints

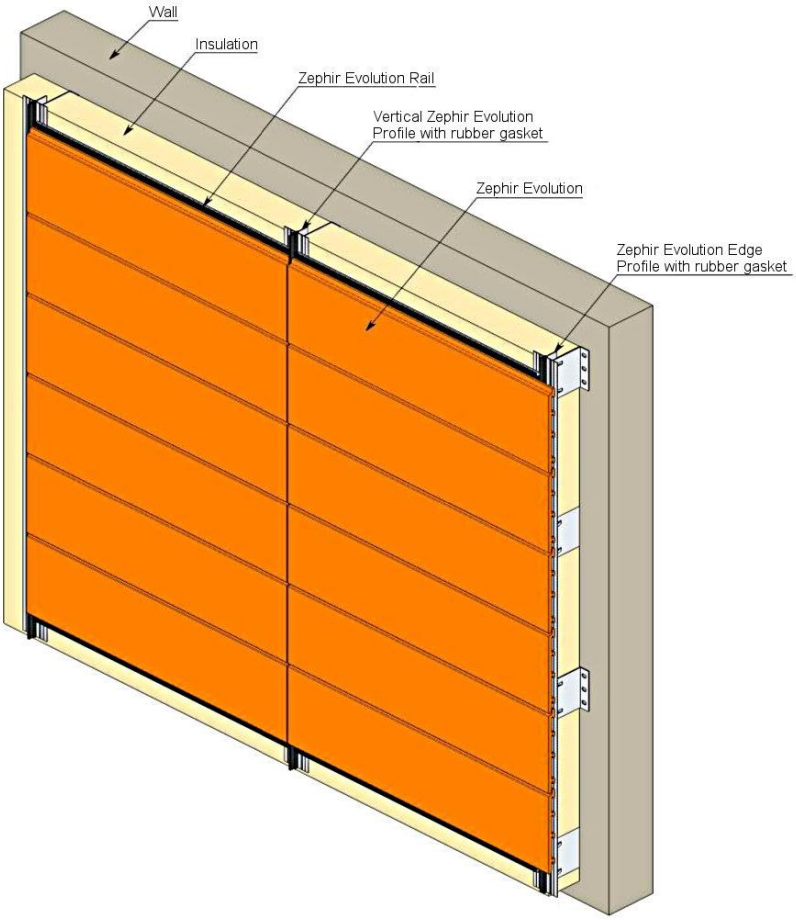

Figure 4e – Installation of ZEPHIR EVOLUTION with straight joints + vertical waterproofing joint

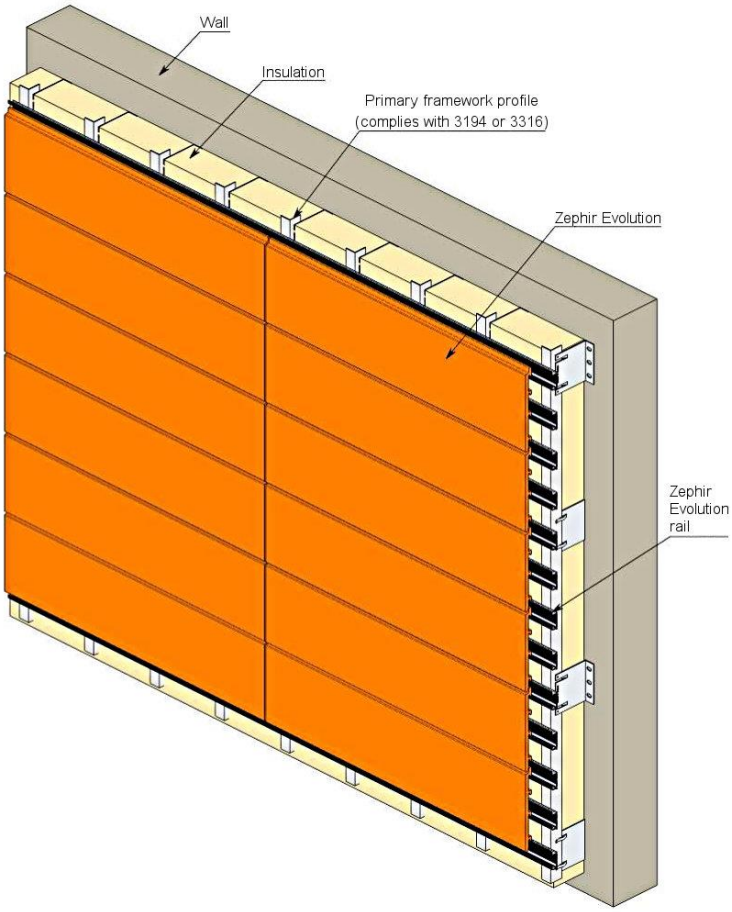

Figure 4f – Installation of ZEPHIR EVOLUTION with additional horizontal rail

Figures common to timber and metal frameworks

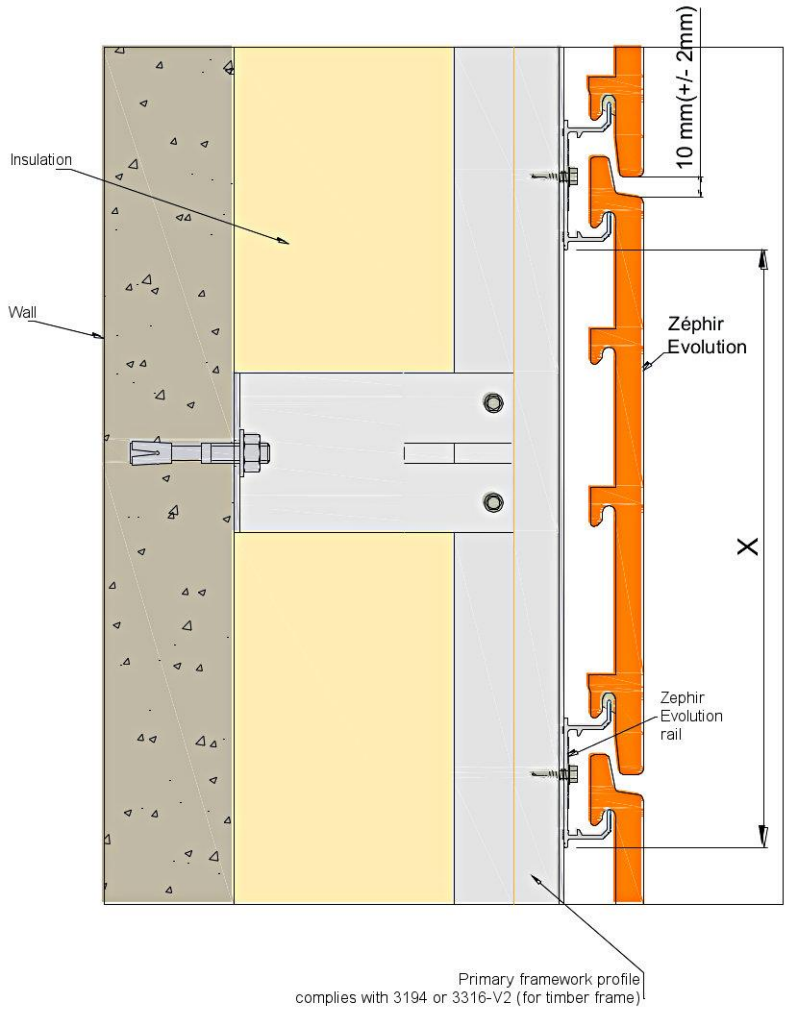

Module	
Zephir Evolution 20	X = 200mm
Zephir Evolution 25	X = 250mm
Zephir Evolution 30	X = 300mm
Zephir Evolution 40	X = 400mm

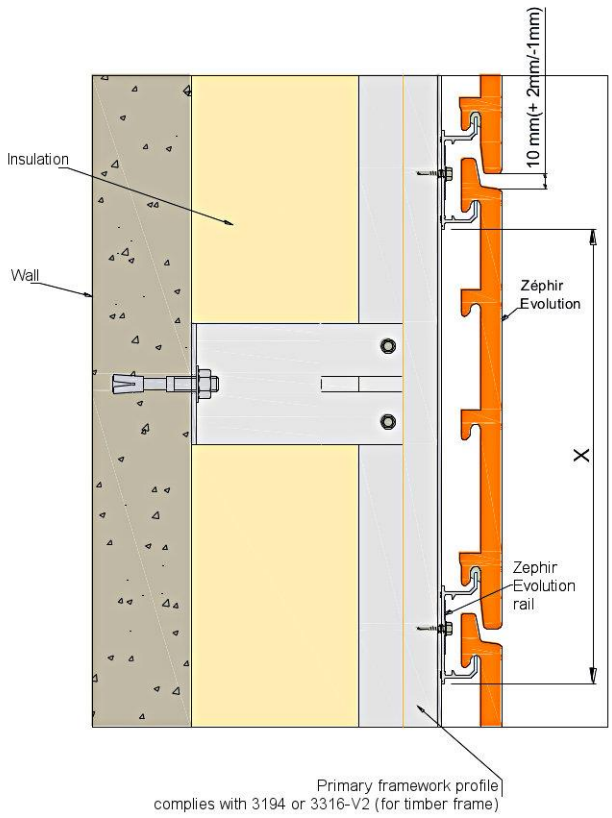

Module	
Zephir Evolution 20	X = 200mm
Zephir Evolution 25	X = 250mm
Zephir Evolution 30	X = 300mm
Zephir Evolution 40	X = 400mm

Figure 5a – ZEPHIR EVOLUTION field panels – Side view

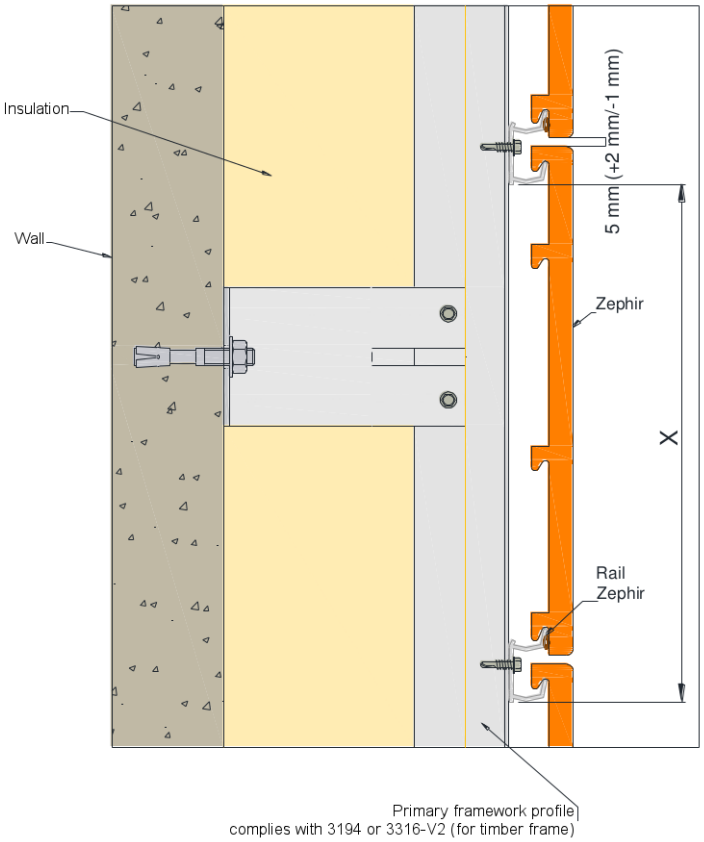

Installation on standard Zephir rail:
X = module written on the pallet

Installation on XL Zephir rail:
X = module written on the pallet + 9mm

Figure 5b – ZEPHIR field panels – Side view

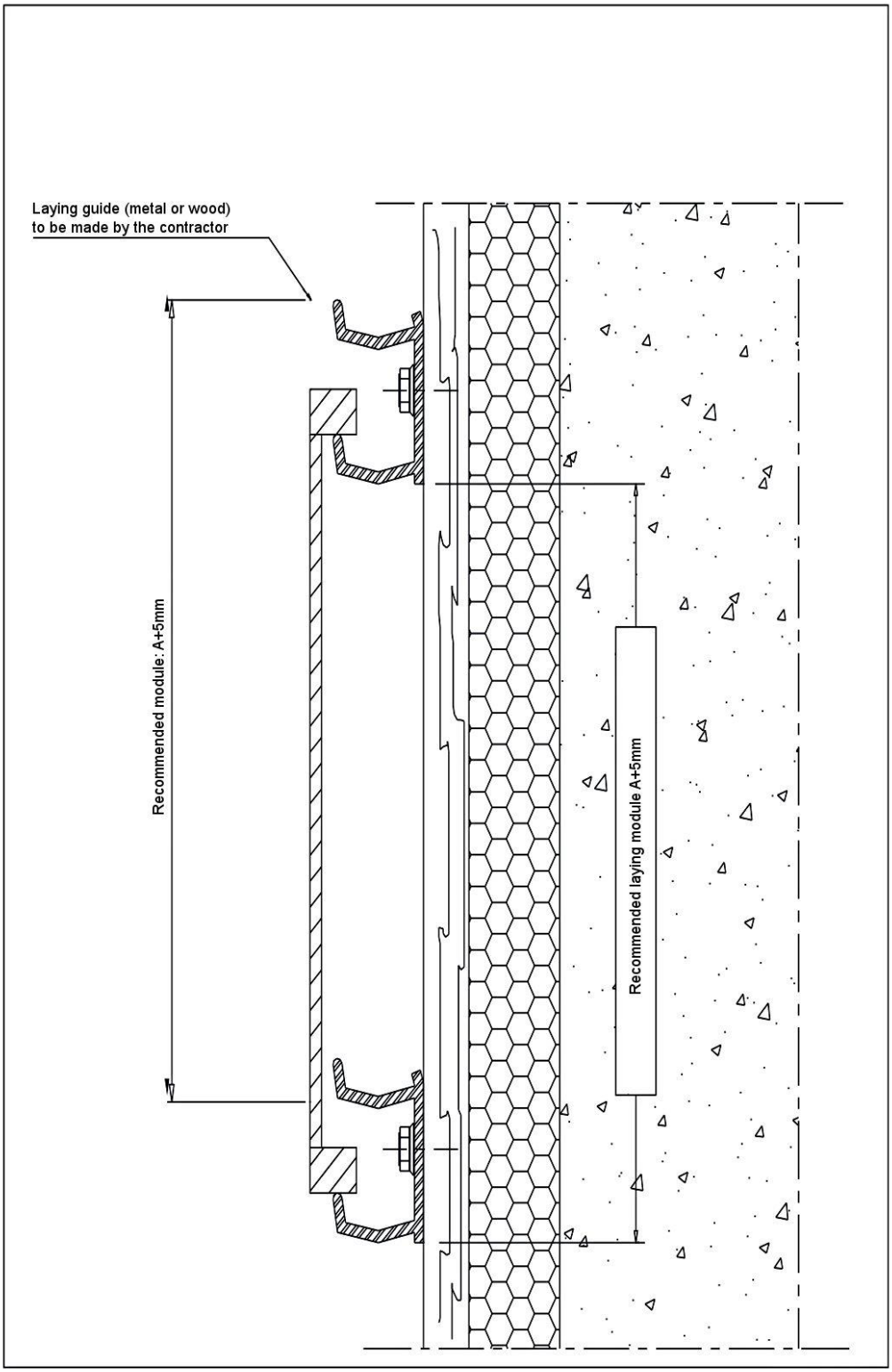

Dimensions in mm

x : recommended laying module: A+5mm rounded to the mm above.
The recommended module is written on every delivered pallet.

Figure 5c – Laying accessory

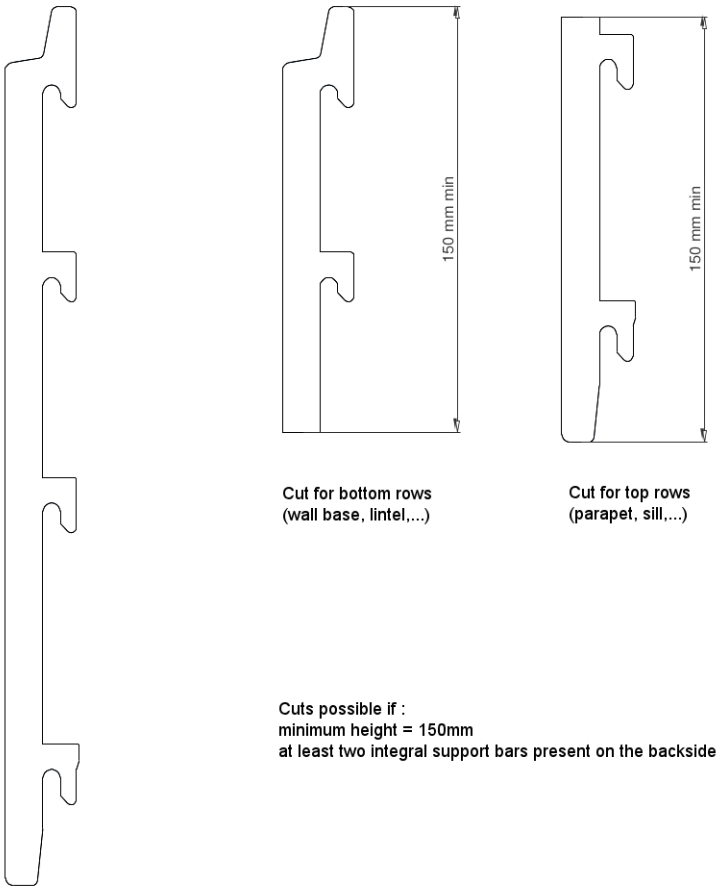

Figure 6a – ZEPHIR EVOLUTION – Section – Side wiew

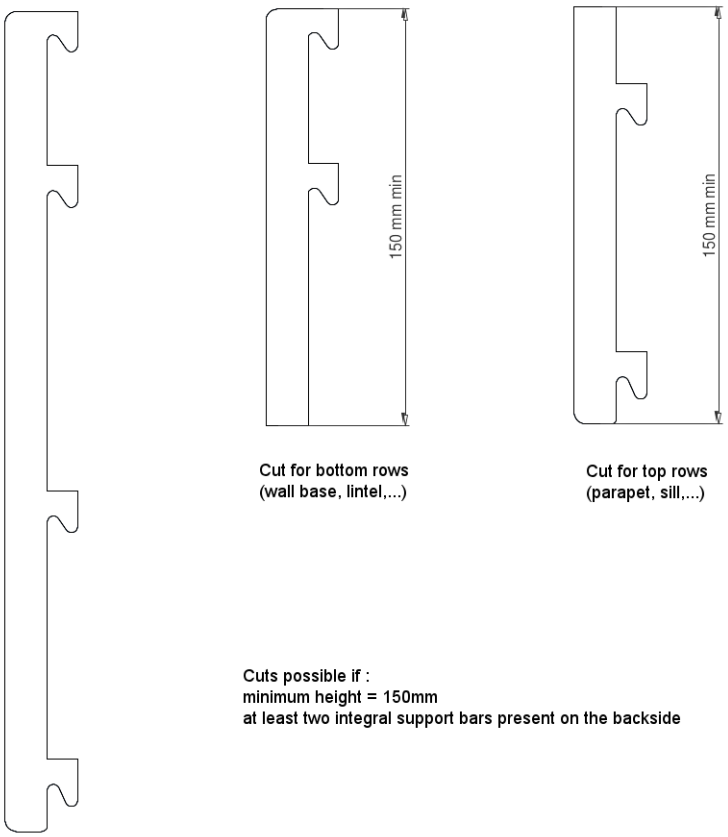

Figure 6b – ZEPHIR– Section – Side view

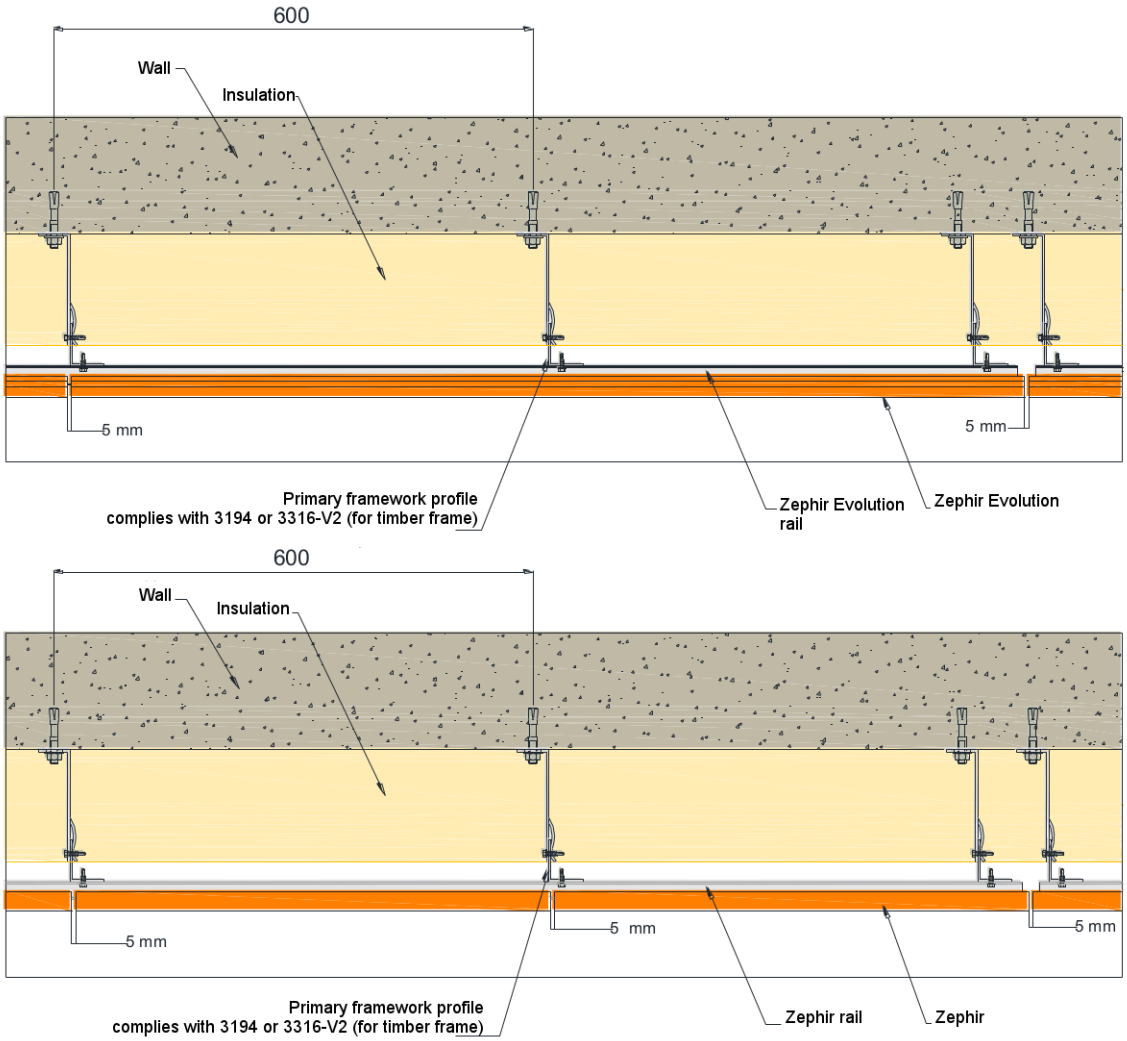

Figure 7a – Installation of ZEPHIR EVOLUTION field panel – Top view

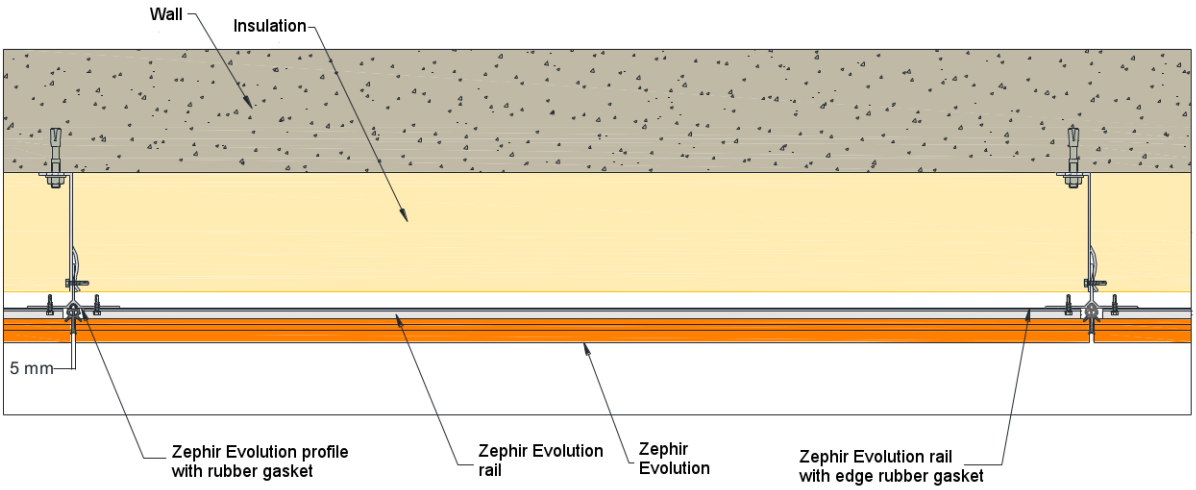

Figure 7b – Installation of ZEPHIR EVOLUTION field panel with vertical waterproofing gasket– Top view

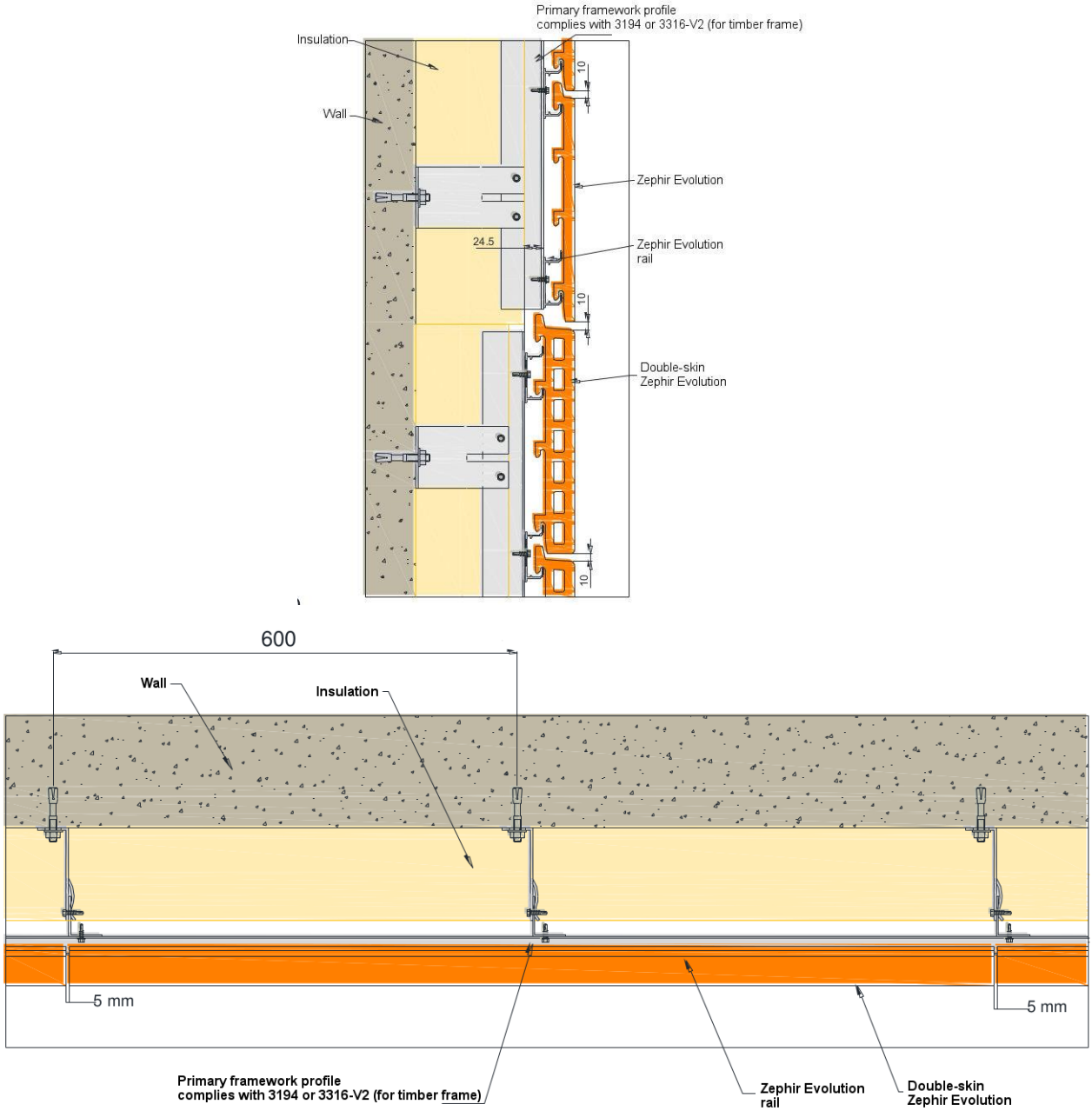

Figure 8a – Double-skin ZEPHIR EVOLUTION / ZEPHIR – Side and top views

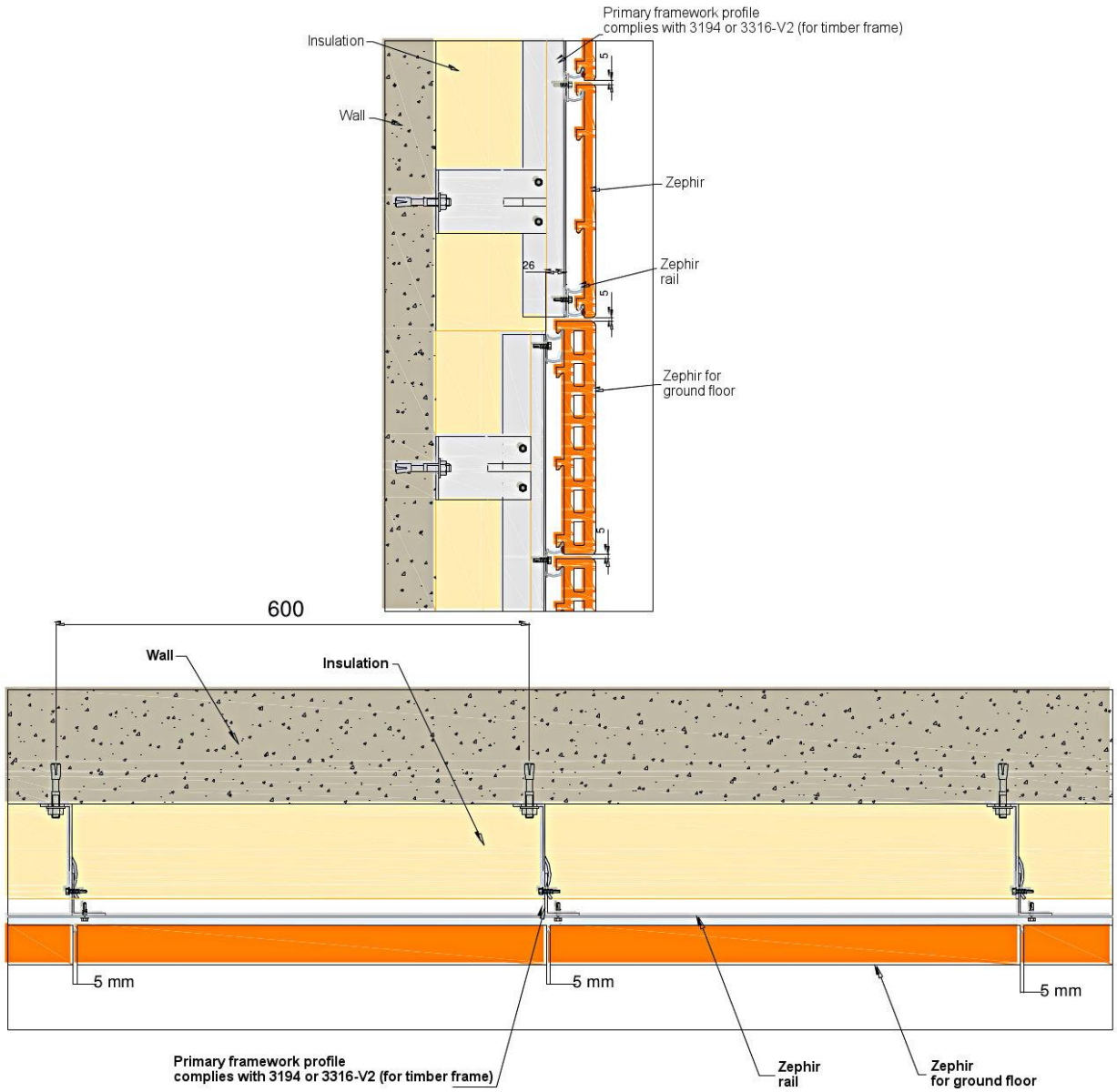

Figure 8b – ZEPHIR EVOLUTION / ZEPHIR – Ground floor - Side and top views

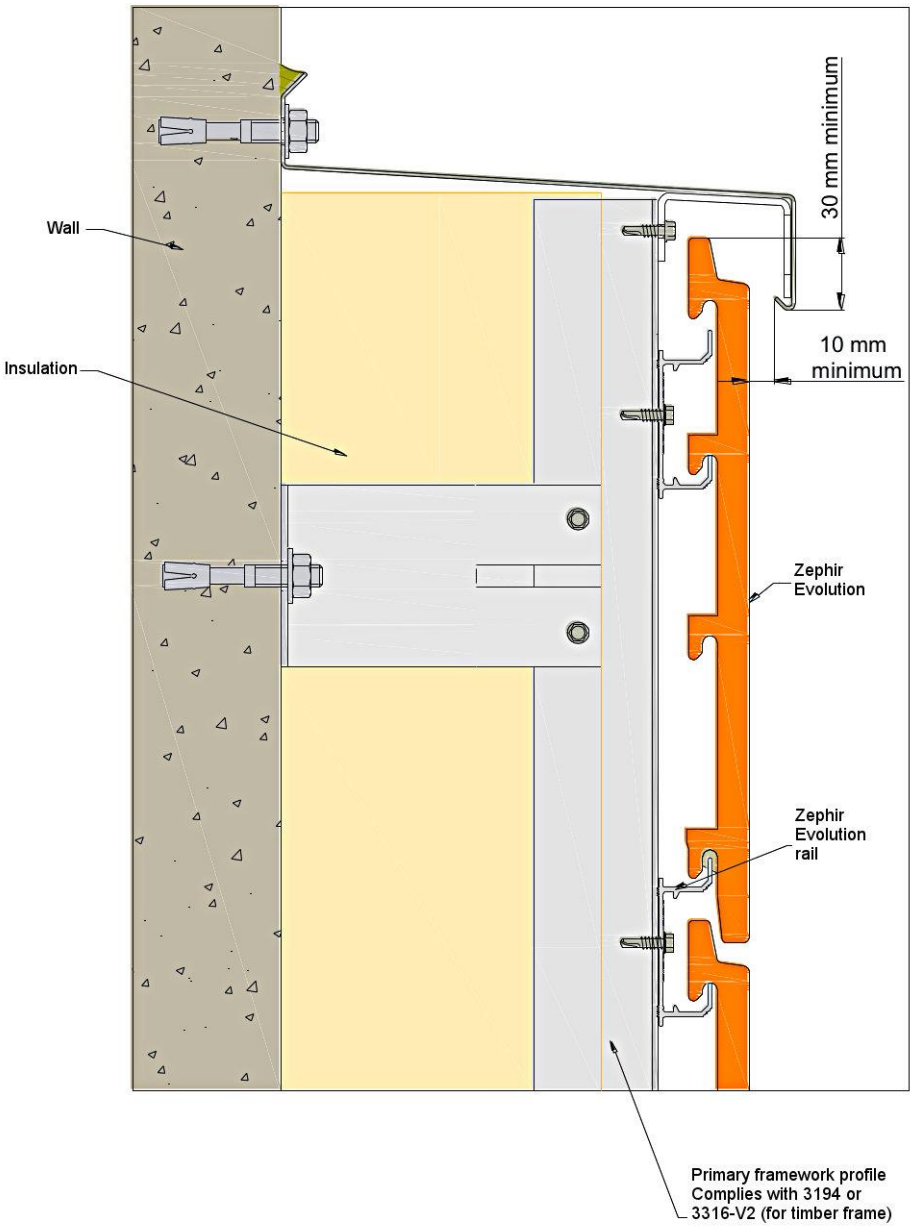

Figure 9 – ZEPHIR EVOLUTION / ZEPHIR – Parapet – Side view

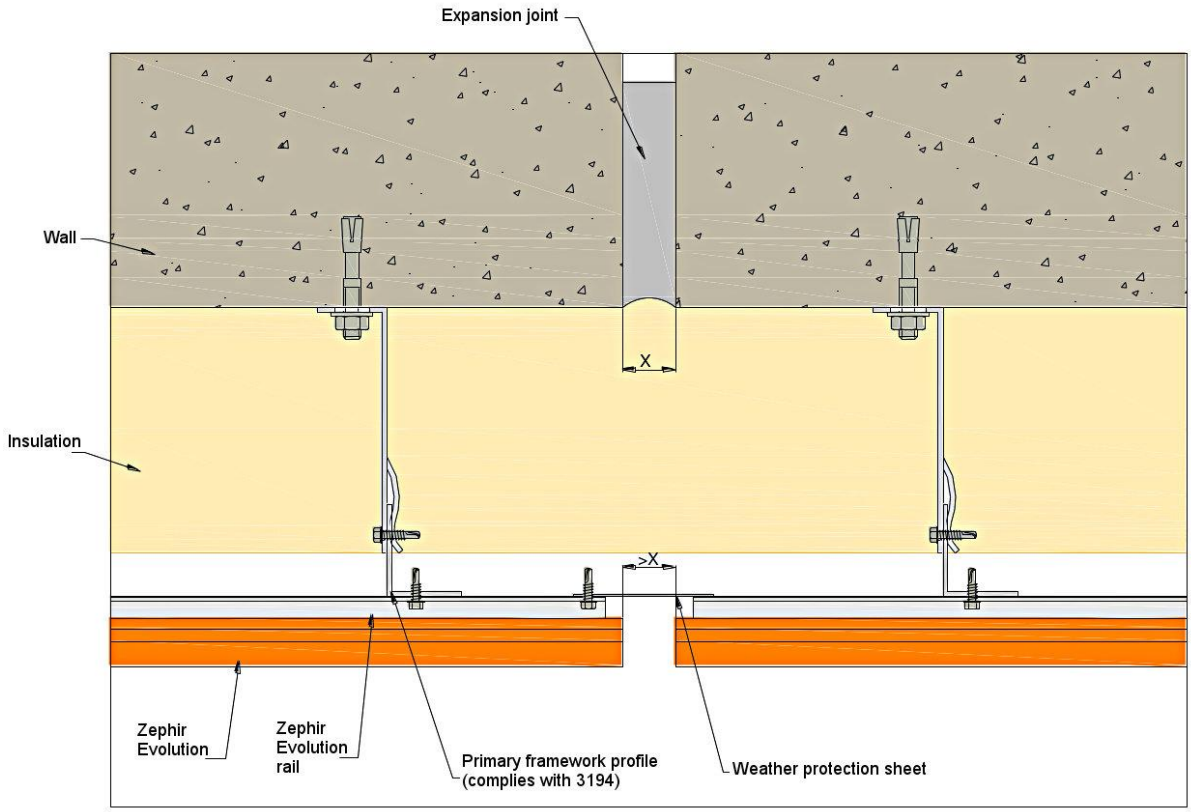

Figure 10 – ZEPHIR EVOLUTION / ZEPHIR – Expansion joint – Top view

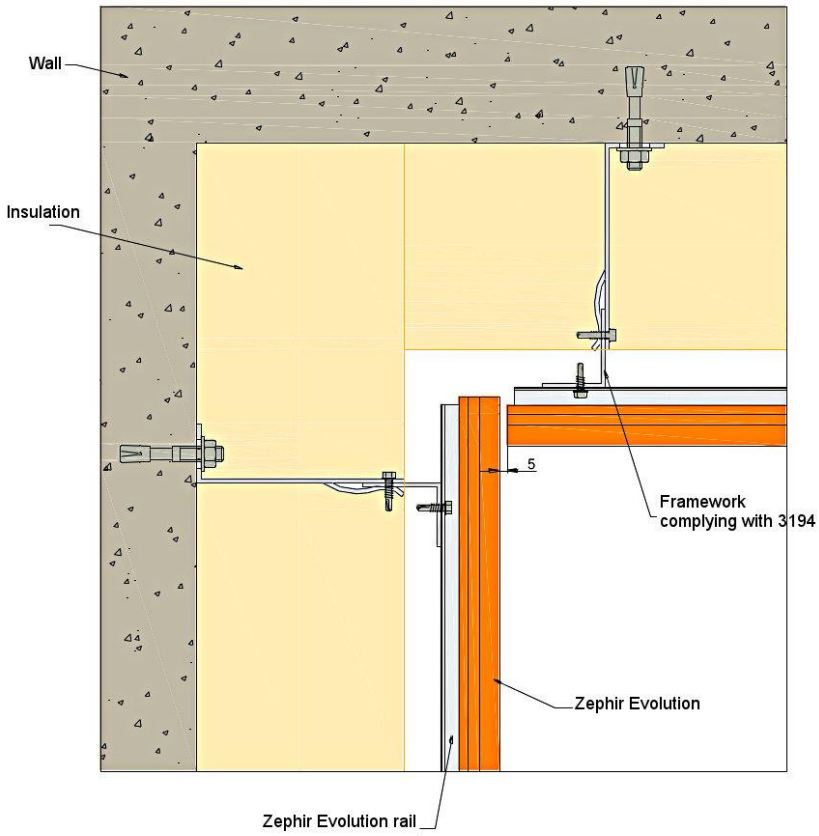

Figure 11 – ZEPHIR EVOLUTION / ZEPHIR – Internal corner

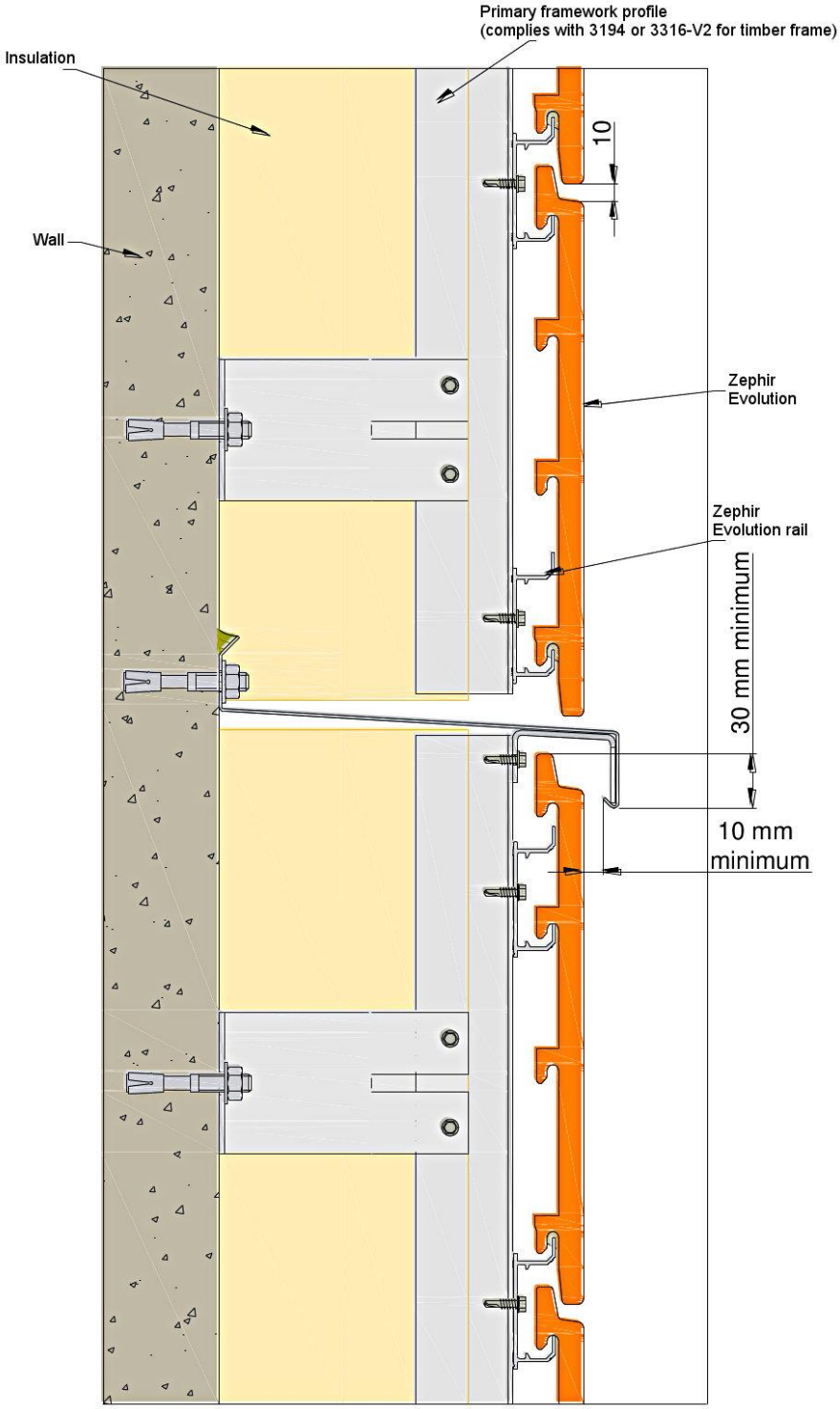

Figure 12 – ZEPHIR EVOLUTION / ZEPHIR –Splitting the air space – Side view

Figures for installation on timber frame

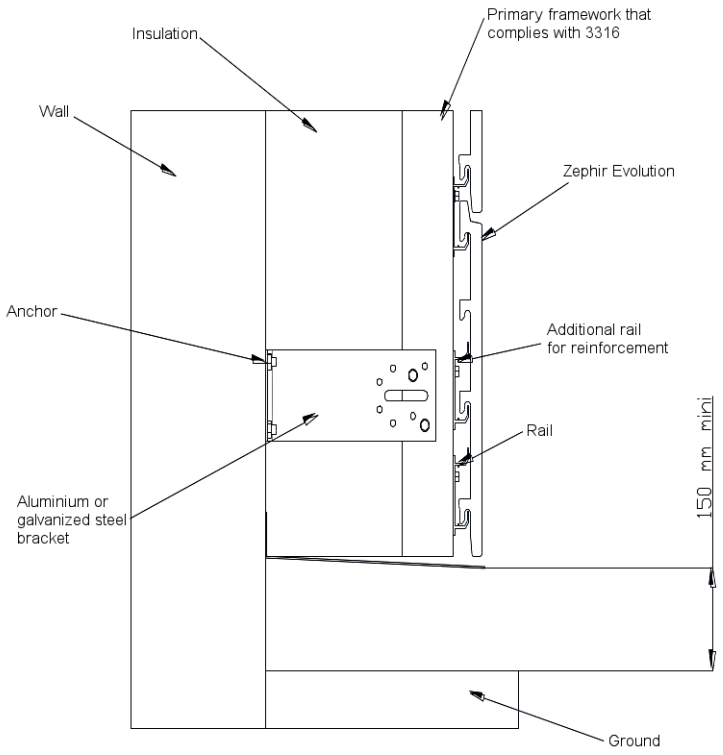

Figure 13 – ZEPHIR EVOLUTION / ZEPHIR – Wall base with timber framework

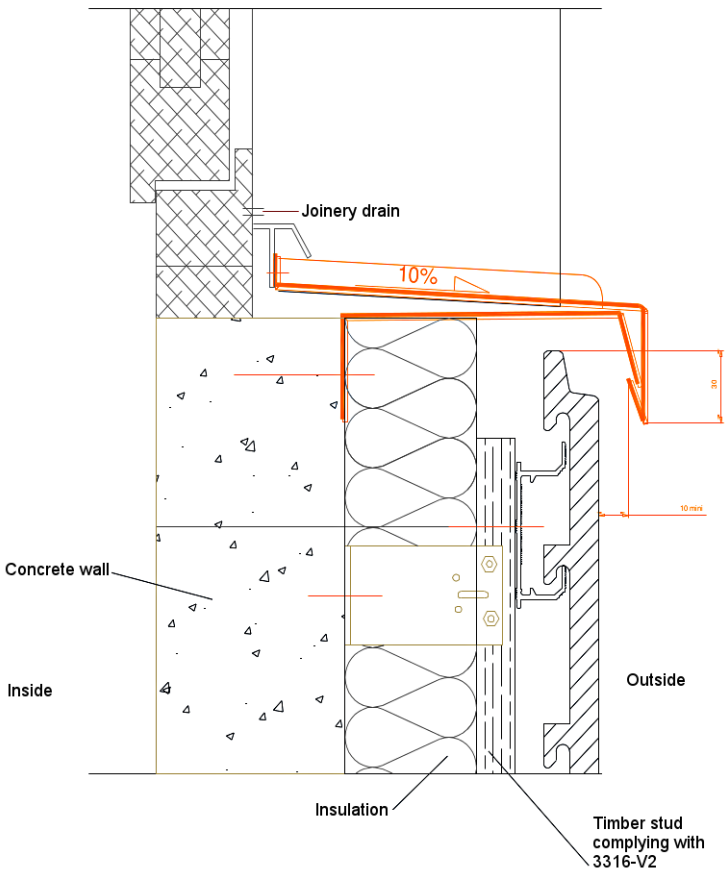

Figure 14 – ZEPHIR EVOLUTION / ZEPHIR – Window sill with timber framework

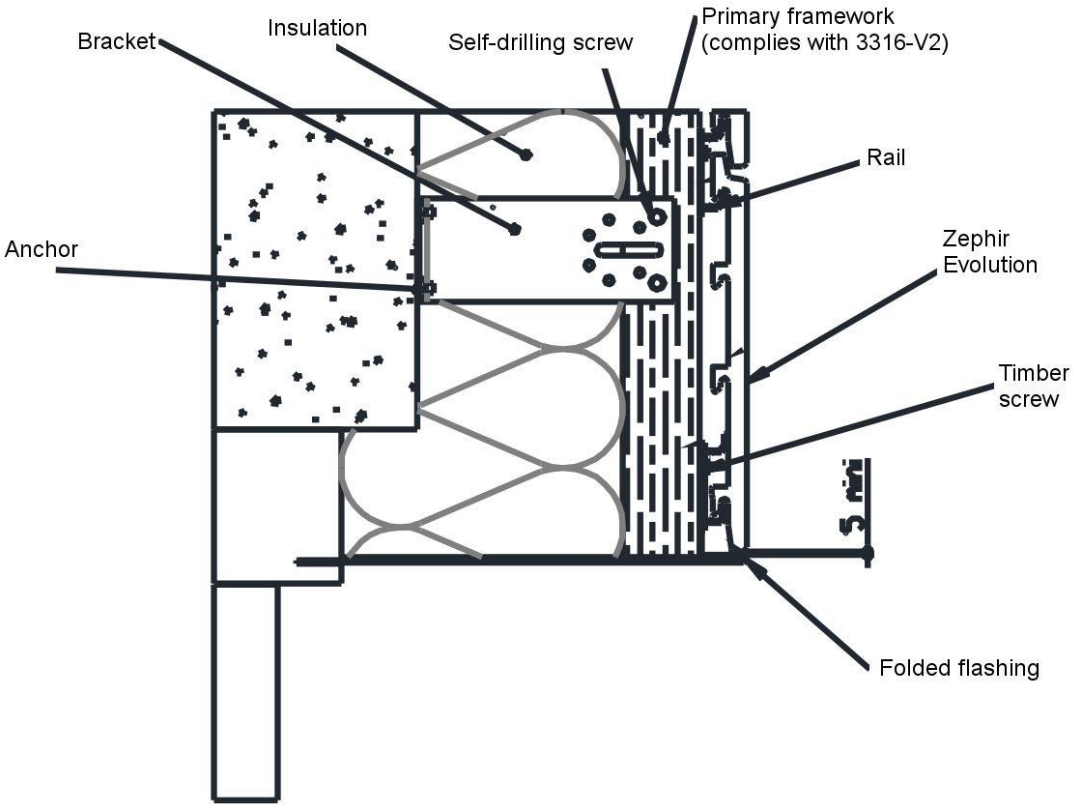

Figure 15 – ZEPHIR EVOLUTION / ZEPHIR – Window head with timber framework

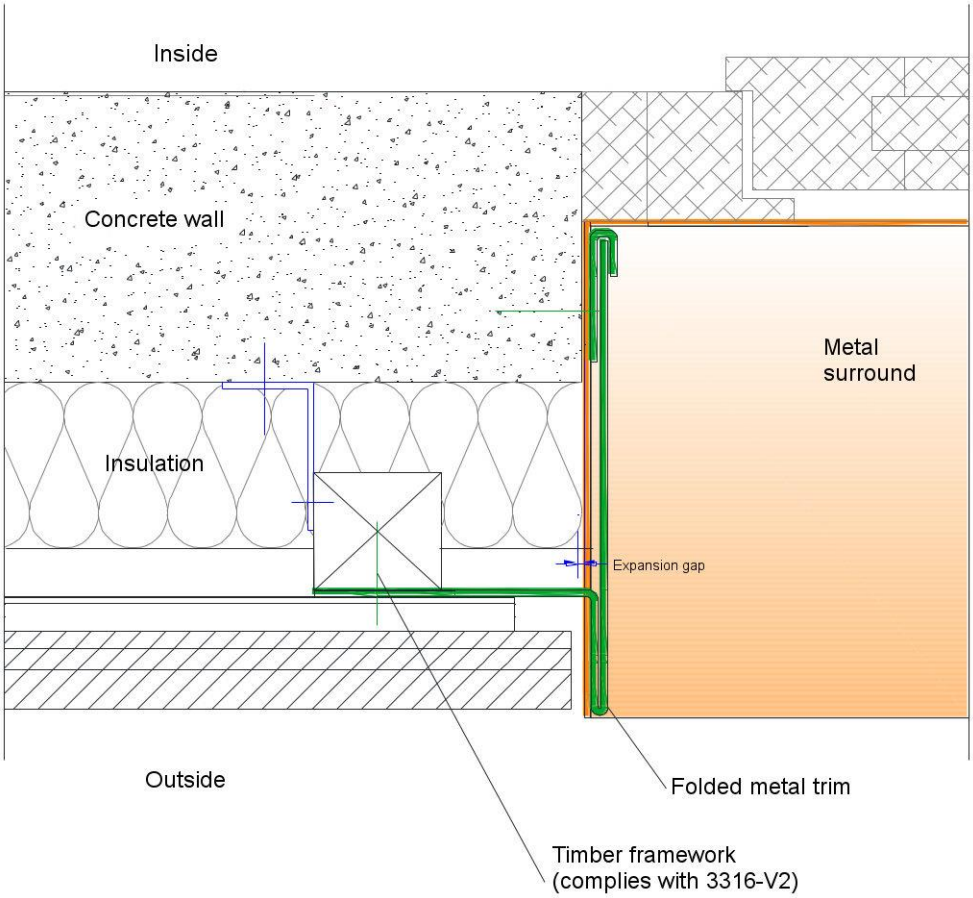

Figure 16 – ZEPHIR EVOLUTION / ZEPHIR –Jambs with timber framework

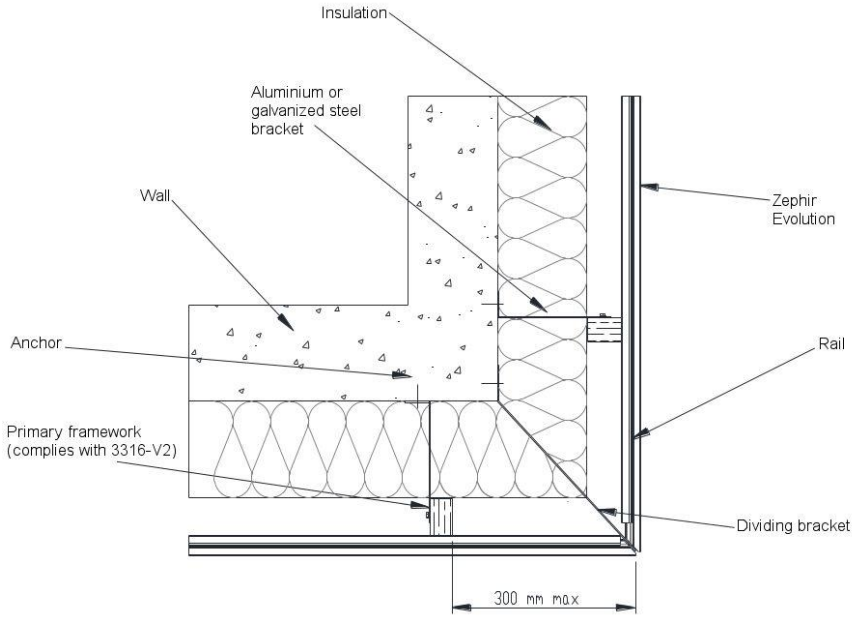

Figure 17 – ZEPHIR EVOLUTION / ZEPHIR – External corner with timber framework

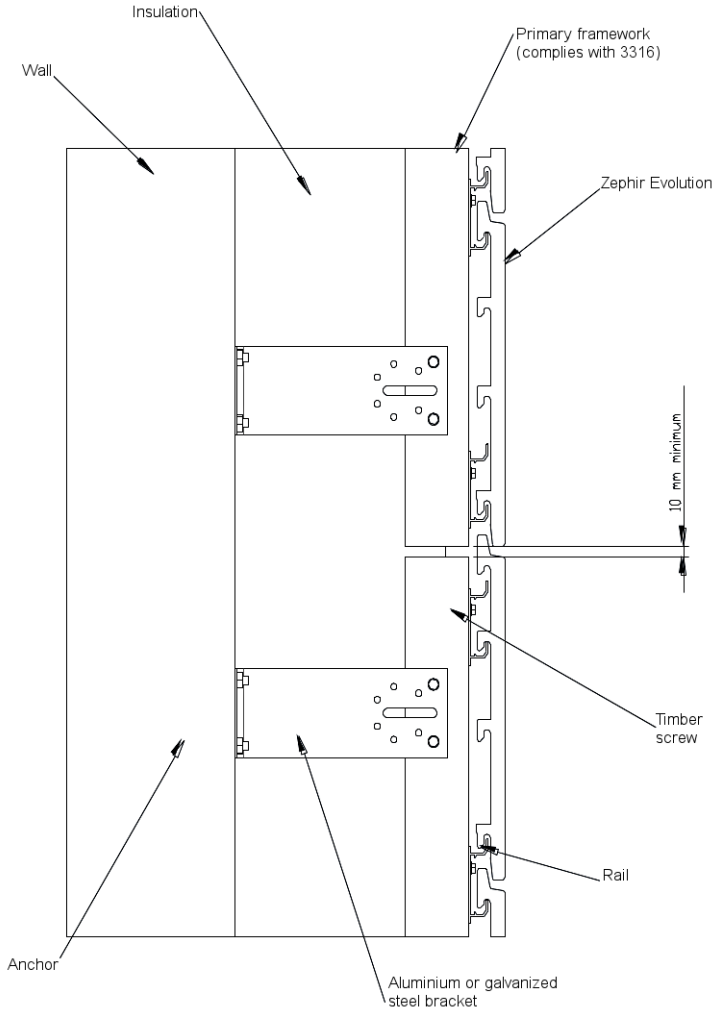

Figure 18a – ZEPHIR EVOLUTION – Splitting the frame (timber framework) – Length ≤ 5.4m

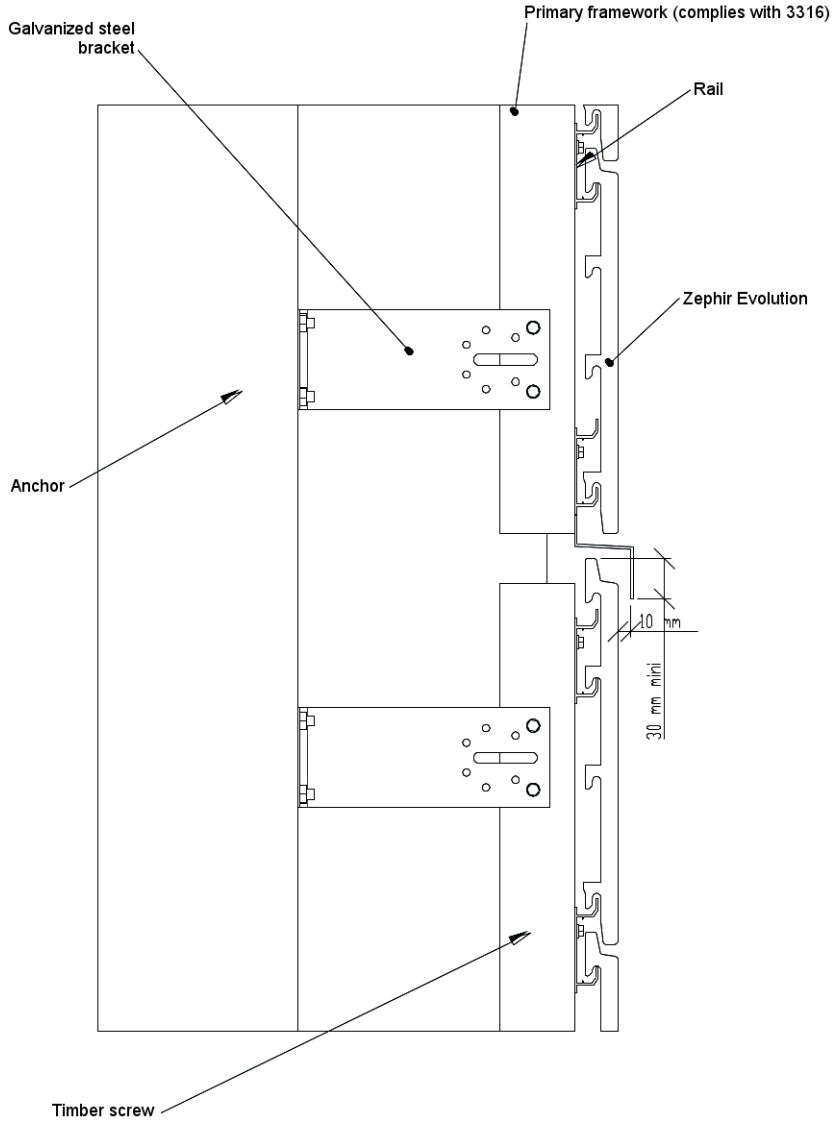

Figure 18b – ZEPHIR – Splitting the frame (timber framework), with flashing – 5.4m ≤ Length ≤ 11m

Figures for installation on metal frame

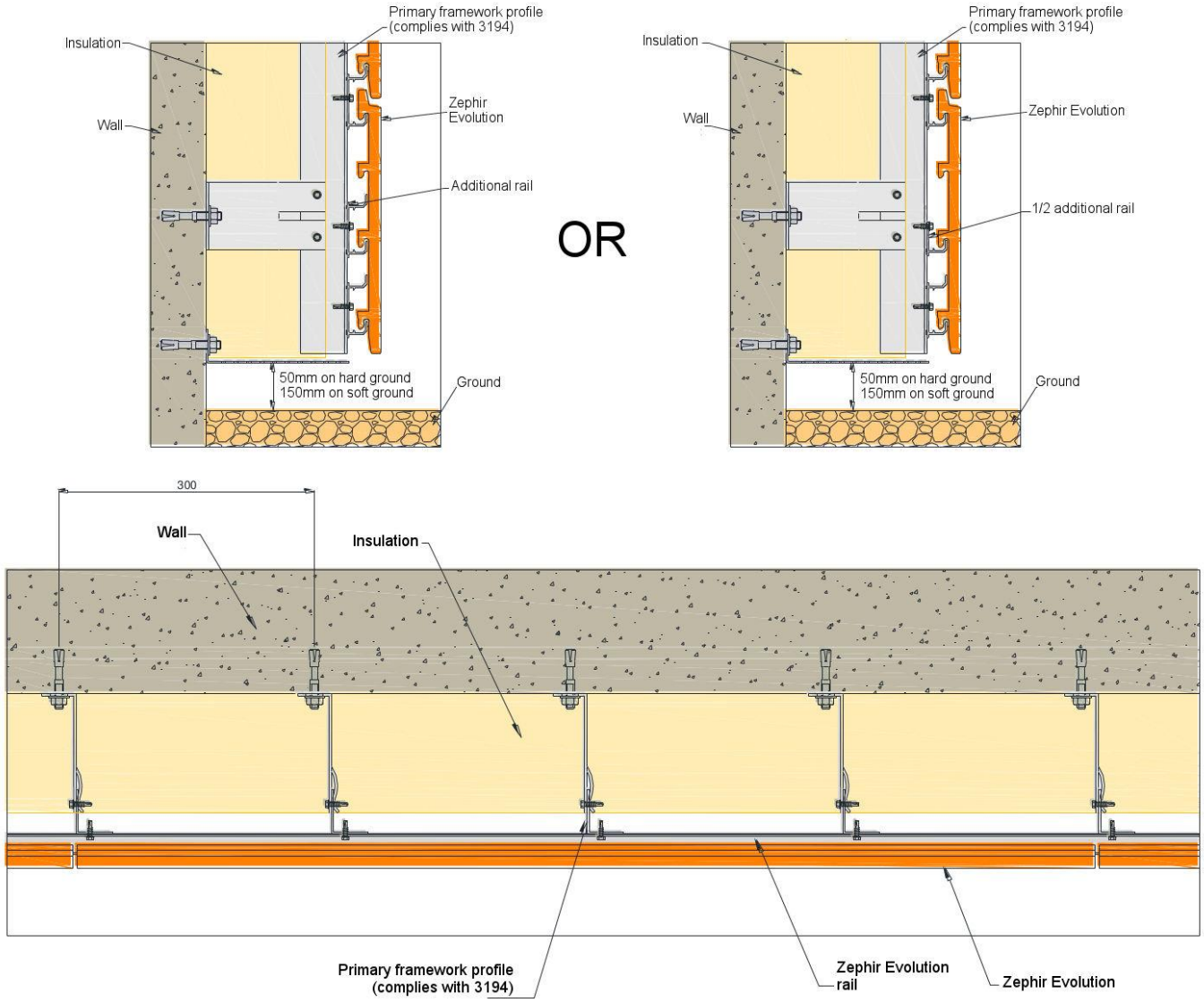

Figure 19 – ZEPHIR EVOLUTION/ ZEPHIR – Wall base – Side and top views

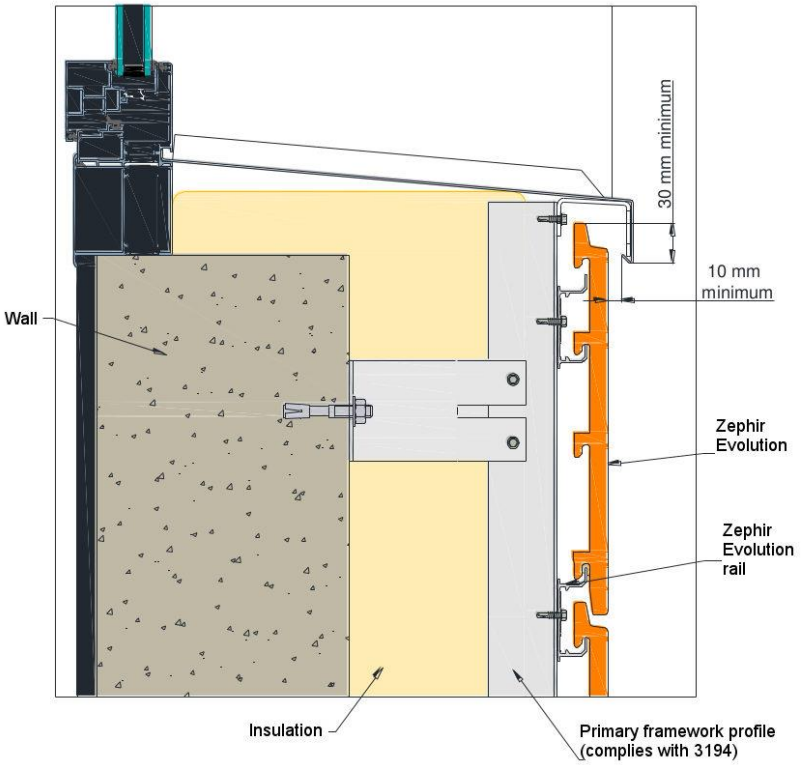

Figure 20 – ZEPHIR EVOLUTION / ZEPHIR – Window sill – Side wiew

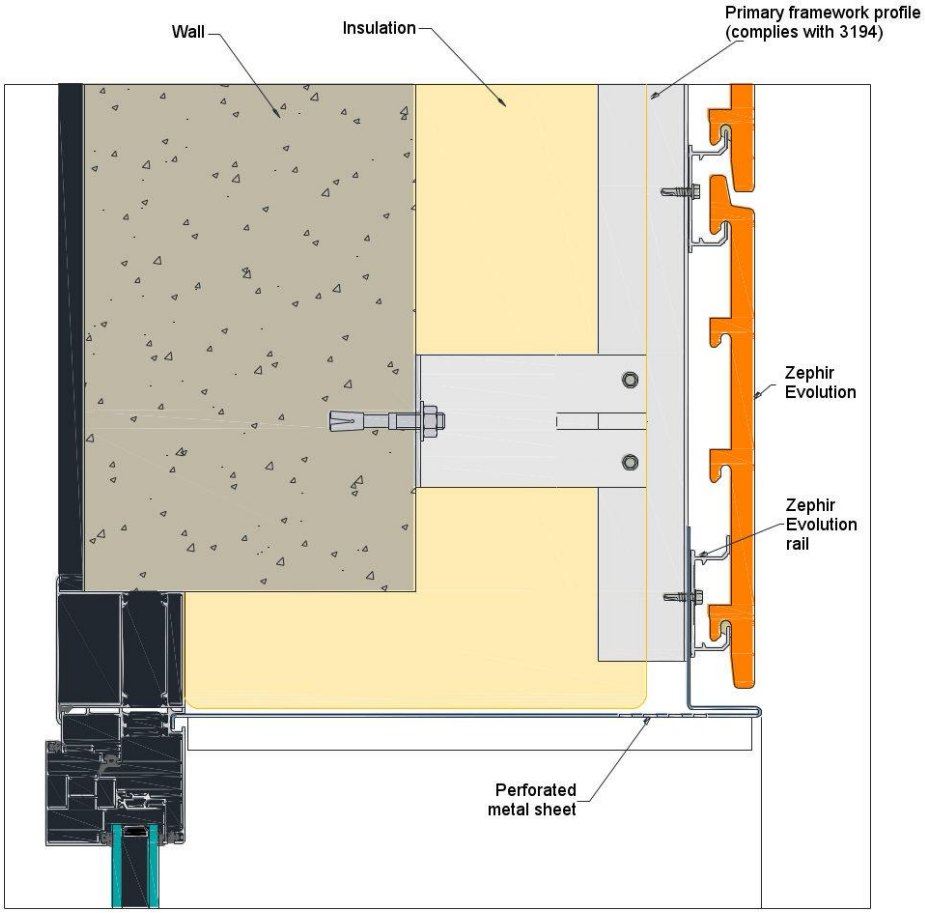

Figure 21 – ZEPHIR EVOLUTION / ZEPHIR – Window head – Side view

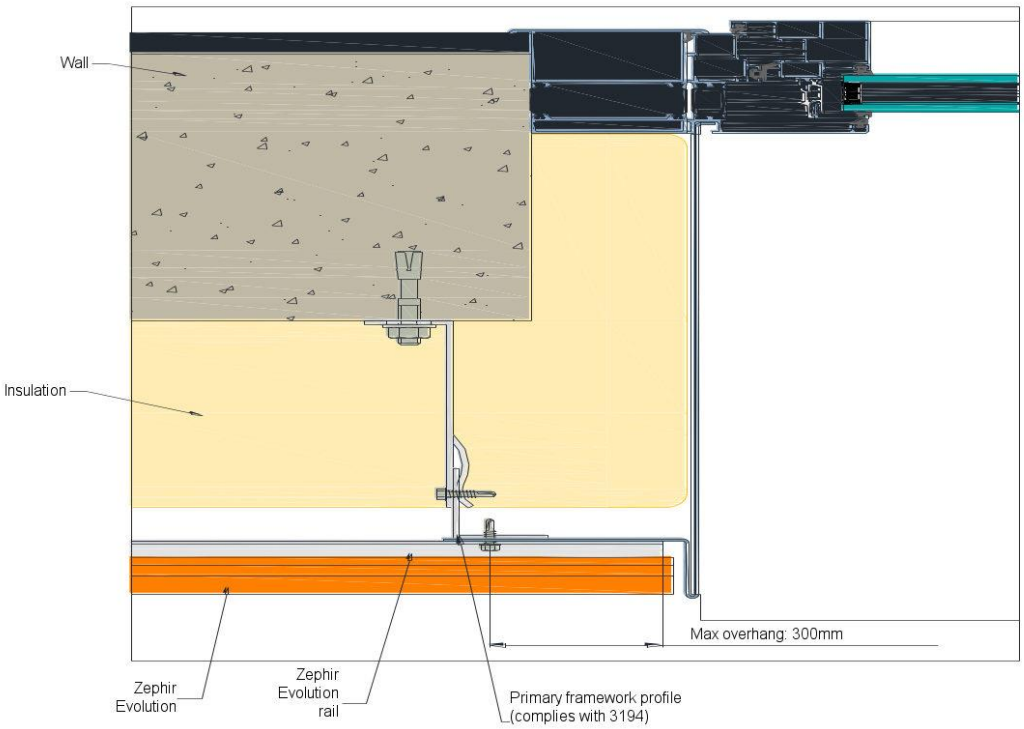

Figure 22a – ZEPHIR EVOLUTION / ZEPHIR – Window jamb with metal surround – Top view

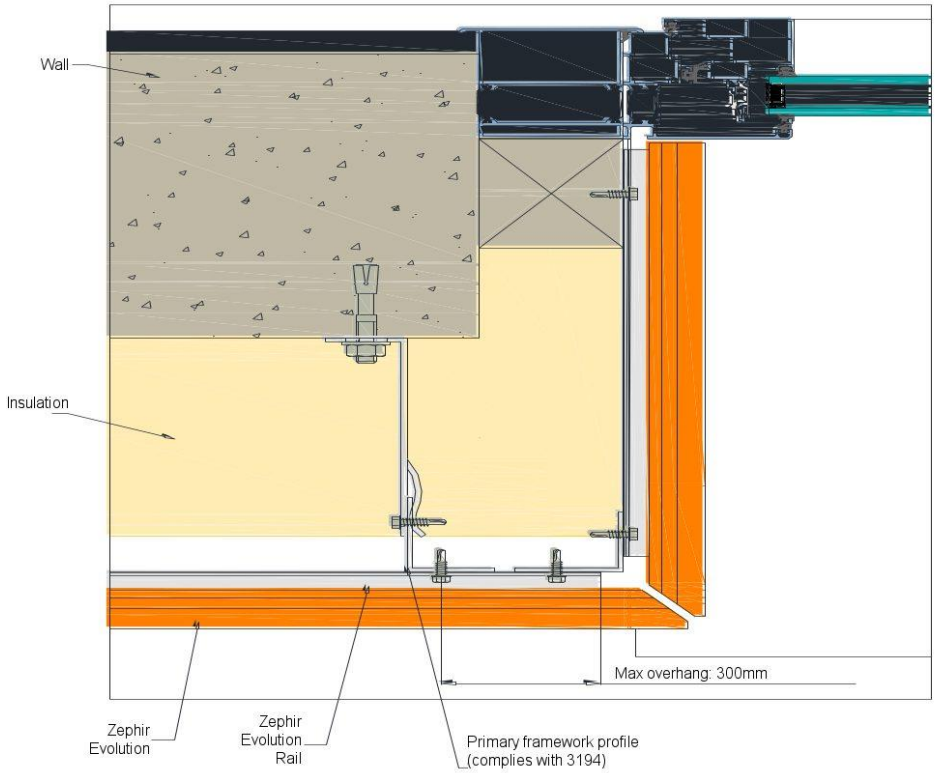

Figure 22b – ZEPHIR EVOLUTION / ZEPHIR – Terracotta window jamb – Top view

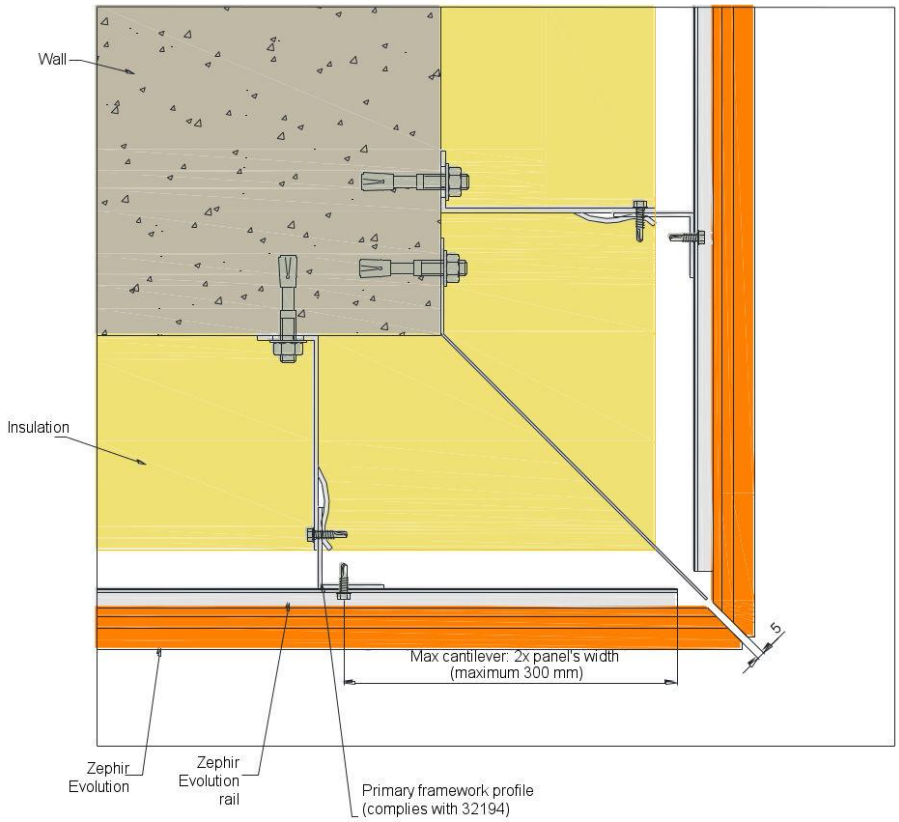

Figure 23a – ZEPHIR EVOLUTION / ZEPHIR – External mitred corner – Top view

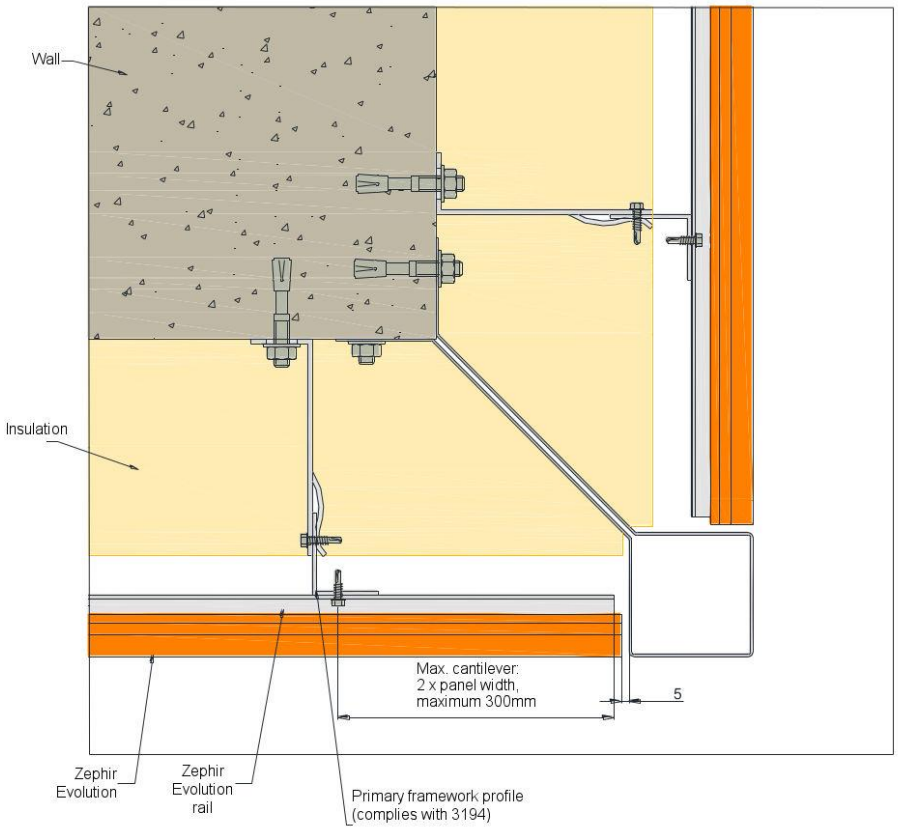

Figure 23b – ZEPHIR EVOLUTION / ZEPHIR – External corner with corner section – Top view

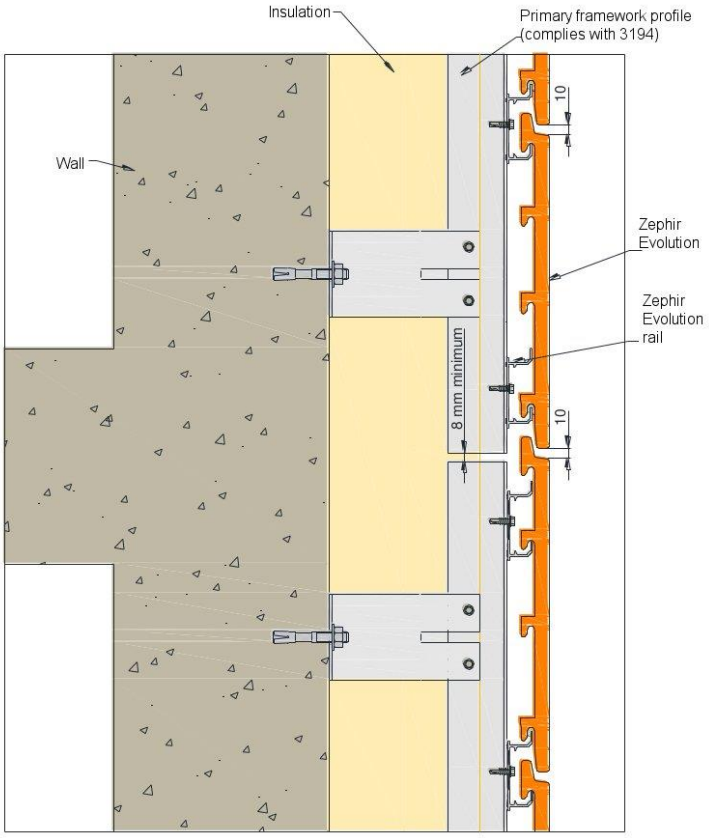

ZEPHIR EVOLUTION

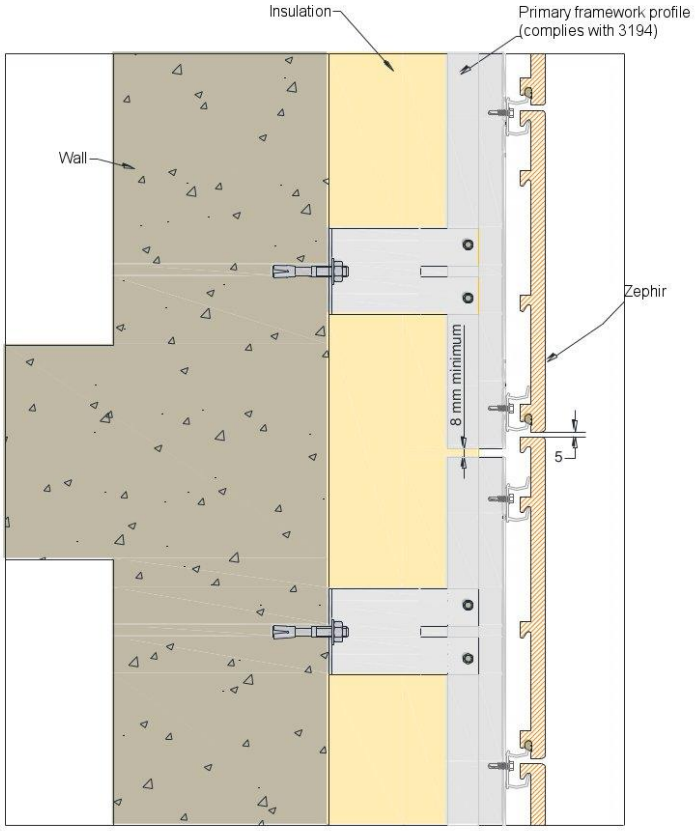

ZEPHIR

Figure 24a – ZEPHIR EVOLUTION / ZEPHIR – Splitting the framework – Side view

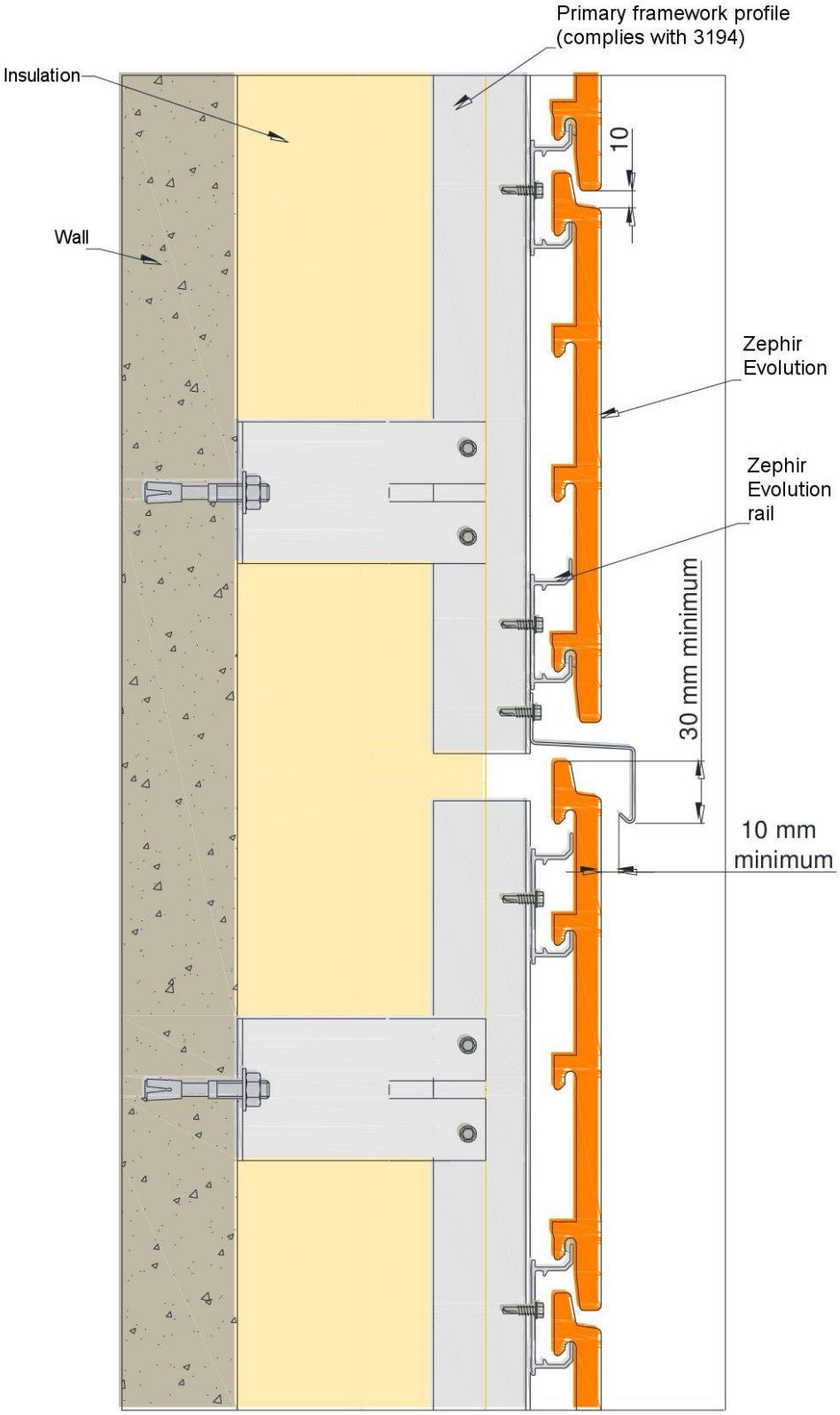

Figure 24b – ZEPHIR EVOLUTION / ZEPHIR – Splitting the framework + flashing – Side view

Figures for installation on timber framed buildings

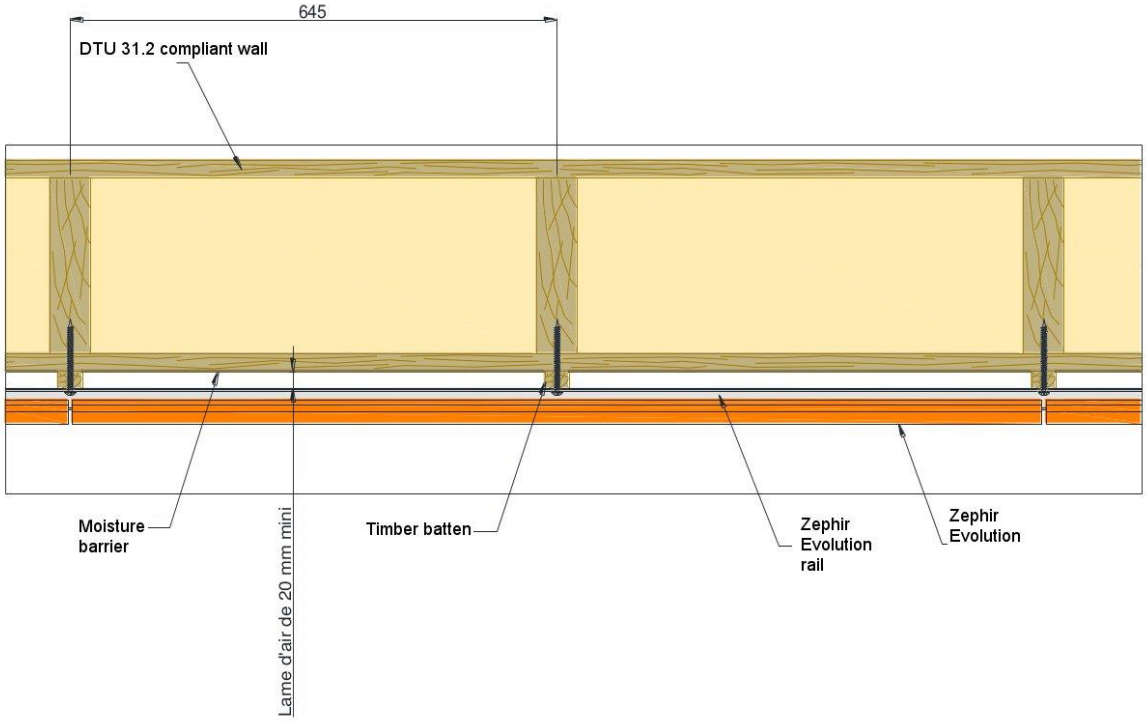

Figure 25 – ZEPHIR EVOLUTION/ ZEPHIR – Field panels – Top view

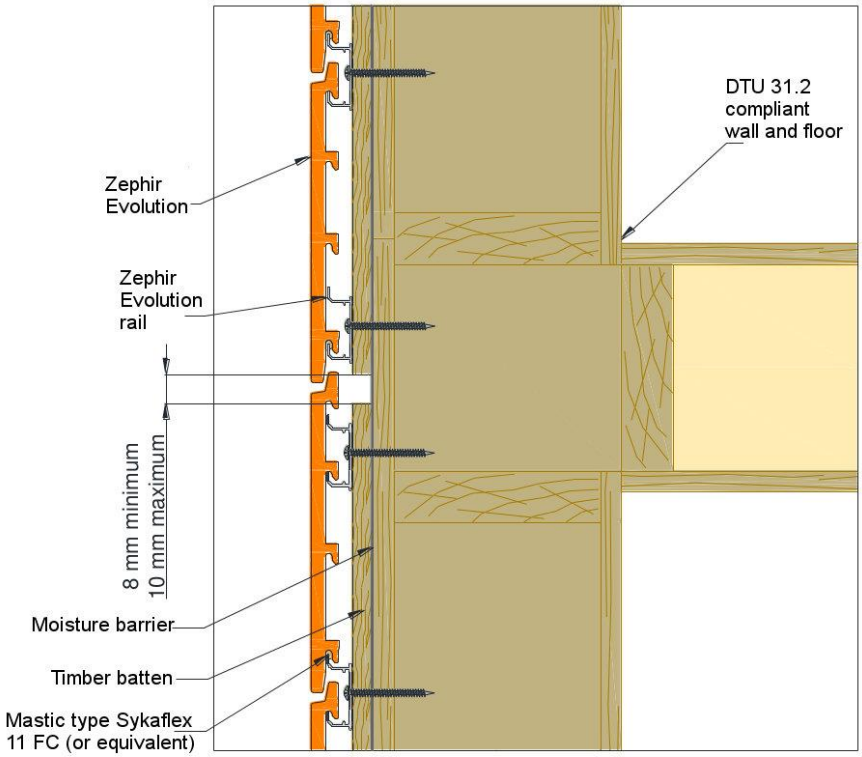

ZEPHIR EVOLUTION

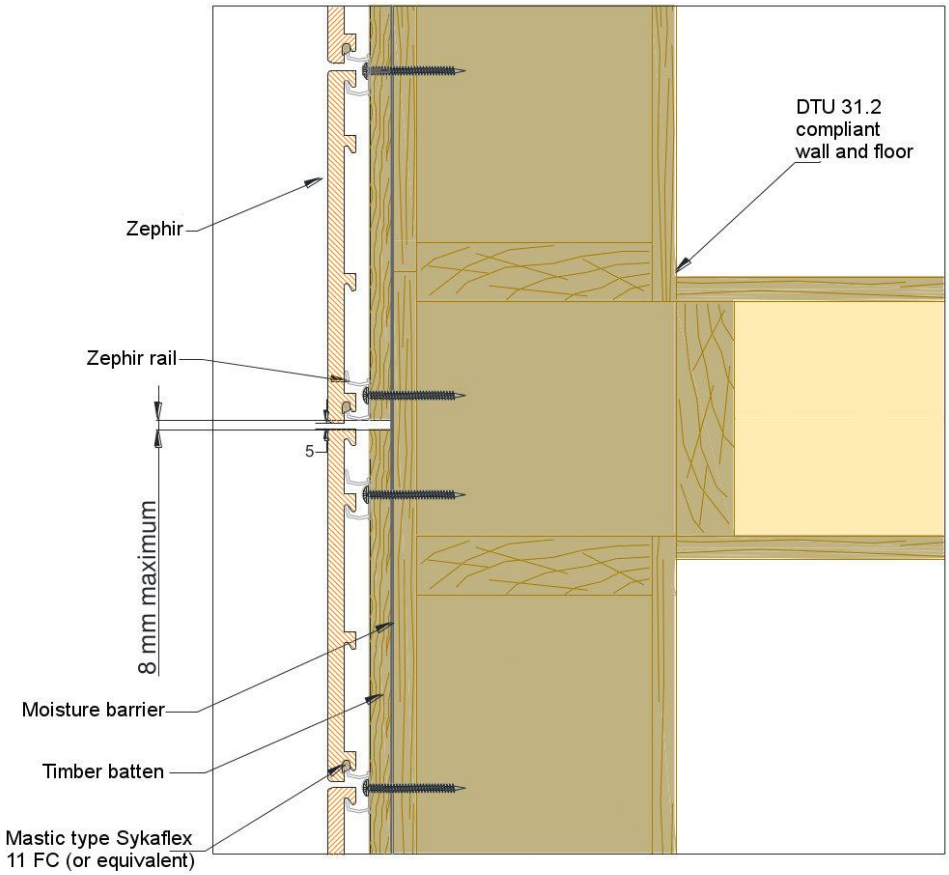

ZEPHIR

Figure 26 – ZEPHIR EVOLUTION/ ZEPHIR – Detail at floor lever – Side view

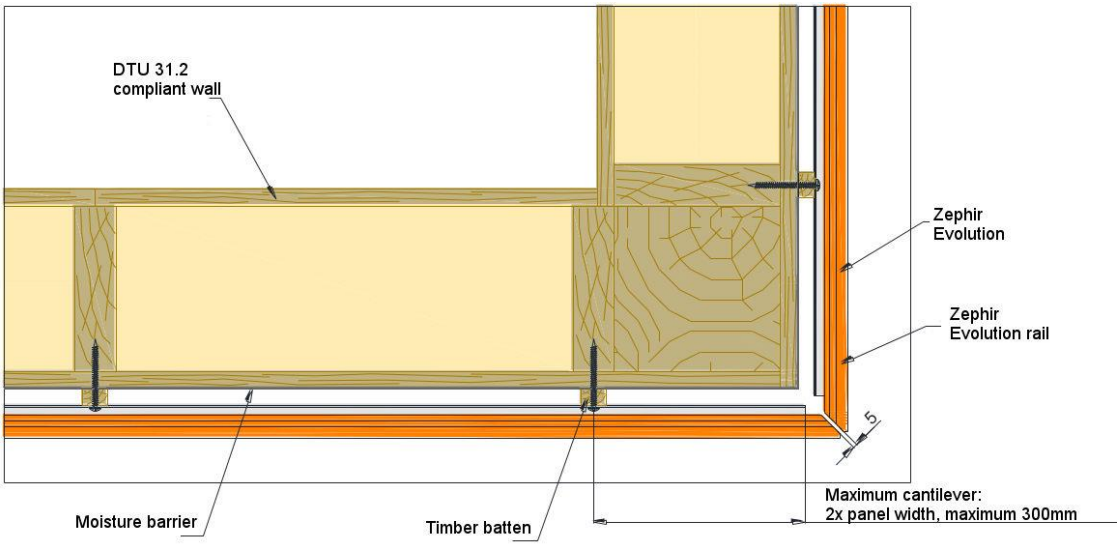

Figure 27 – ZEPHIR EVOLUTION/ ZEPHIR – External corner with timber framed building – Top view

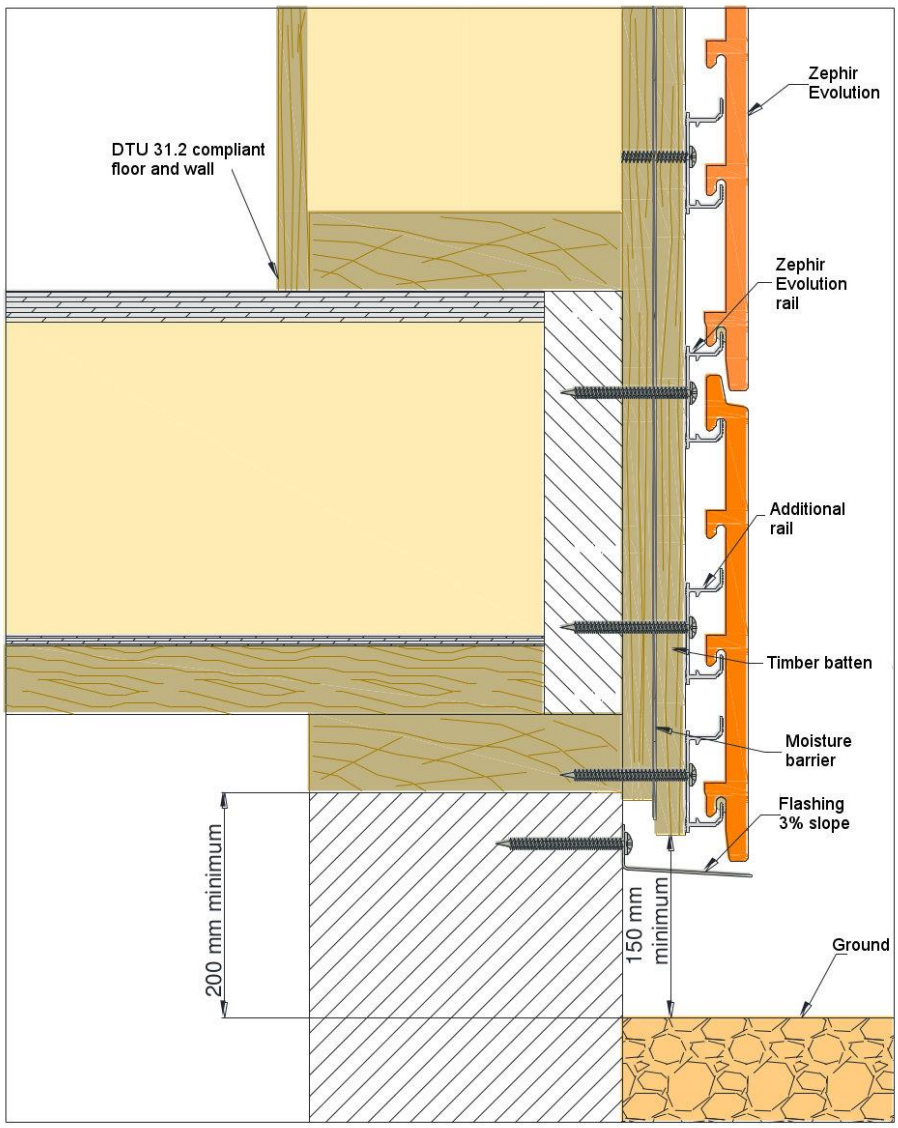

Figure 28a – ZEPHIR EVOLUTION/ ZEPHIR – Wall base detail on timber framed building – Side view

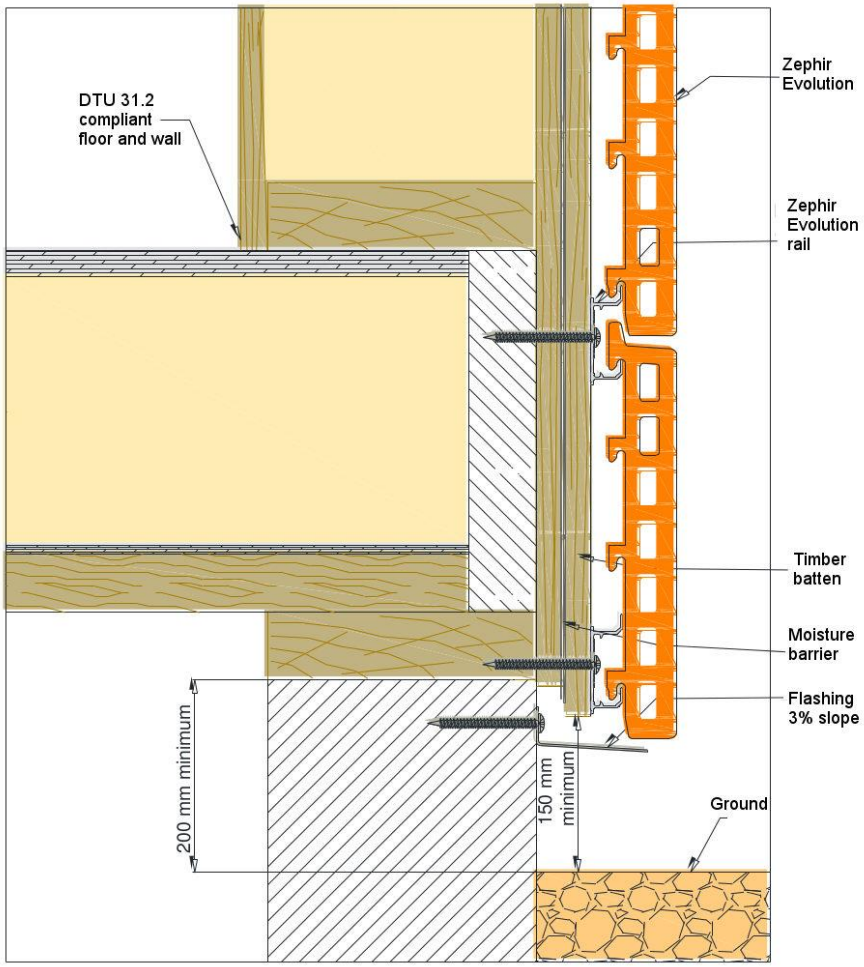

Figure 28b – ZEPHIR EVOLUTION/ ZEPHIR – Wall base with double-skin panel – Side view

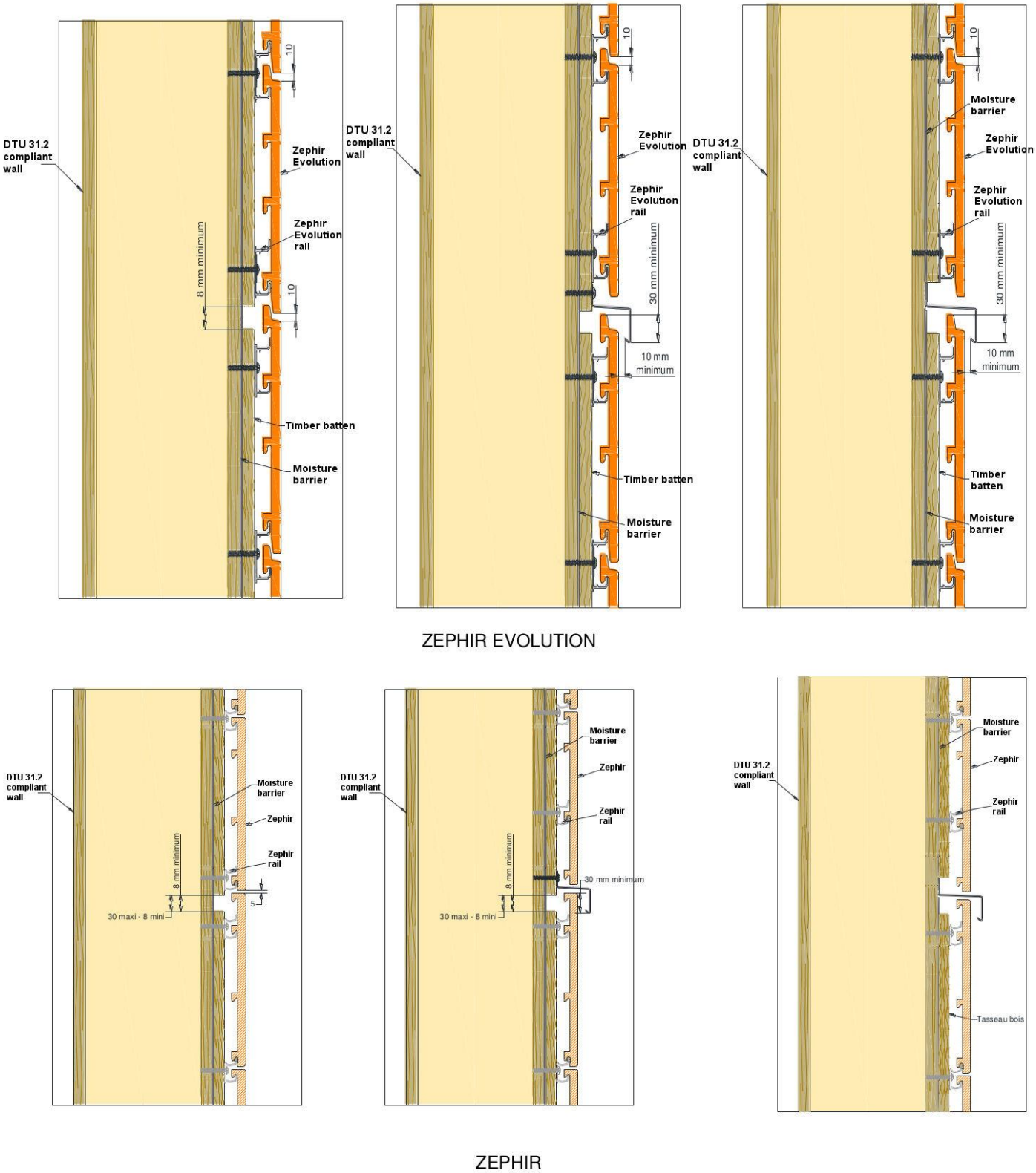

Figure 29 – ZEPHIR EVOLUTION/ ZEPHIR – Splitting the sub-frame on a timber framed building, with or without flashing, and cutting the moisture barrier

Appendix A

Installation of ZEPHIR in seismic regions on an aluminium frame, with 100mm ISOALU LR 150 brackets

A1. Field of application

The ZEPHIR wall cladding system can be installed on an aluminium frame using 100mm ISOALU LR 150 brackets, in seismic areas and on types of building as shown in the following table (based on the Decree dated October 22nd, 2010, and revisions):

Seismic areas	Building class type			
	I	II	III	IV
1	O	O	O	O
2	O	O	X❶	X
3	O	X❷	X	X
4	O	X❷	X	X

O	Installation possible without specific provisions in the accepted field of application
X	Installation possible on flat, vertical concrete walls, according to the prescriptions of this Appendix
❶	Installation possible without specific provisions in the accepted field of application for one-floor schools (belonging to class type III) that meet the conditions of paragraph 1.1 of "Rules for seismic buildings– PS-MI 89 revision 92" (NF P06-014)
❷	Installation possible without specific provisions in the accepted field of application for buildings of class type II that meet the conditions of paragraph 1.1 of "Rules for seismic buildings– PS-MI 89 revision 92" (NF P06-014)

A2. Technical assistance

TERREAL offers technical support to the developer at the design stage and to the contractor at the construction stage regarding specifications for installation.

Notes produced by TERREAL inform the developer and the contractor, and provide them with recommendations on how to install the ZEPHIR wall-cladding system in seismic regions.

A3. Prescriptions

A3.1 Substrate

The support wall on which the wall cladding is installed is made of shuttered concrete, complying with Rules DTU 23.1 and Eurocode 8.

A3.2 Fastening the brackets to the wall

Fixing on the concrete supporting structure is made using metal anchors bearing a CE mark related to a European Technical Assessment or Evaluation referring to ETAG 001, parts 2 to 5, with performance class C1 under Appendix E, for all seismic areas and all building classes that require specific justification.

Galvanized steel anchors are acceptable if they are protected by insulation, for a use in protected outside environments, either in non-polluted rural areas or urban and industrial environments with normal or severe pollution.

For other cases, stainless steel A4 anchors must be used.

Anchors must sustain the loads shown in Table A1.

Example of anchor that resists loads listed in Table A1:

FM753 Crack M8 from Friulsider.

For configurations not listed in the table, loads can be calculated according to CSTB Workbook 3725, inside the limits imposed by the validated use.

A3.3 Aluminium framework

The fixed aluminium frame shall comply with the requirements of CSTB Workbook No. 3194, completed with the following:

Vertical tracks are split at each floor level of the building (see Fig. A2). A 10 to 20 mm joint is kept between successive profiles.

A3.31 Vertical profiles (*see Fig. 3a*)

The vertical profiles are made of Aluminium grade EN AW 6060 T5 complying with Standard NF EN 755-2. They are 25/10th mm thick, 3m long, with a section of 50 x 42 mm.

These rails are sold by the ETANCO Company under reference ETANCO FACALU L50/42/2.5 Lg 3.00m.

A lateral stop profile is fixed to the support every 6m (*see Fig. A5*).

The centre-to-centre distance between vertical profiles is 600mm.

A3.32 Horizontal support rails for ZEPHIR panels (*see Fig. A3*)

The aluminium support rails for ZEPHIR panels are defined in § 3.2 and 3.3 of the Technical File. They are made of raw aluminium grade EN AW 6060 R20. Their section is 36 x 22 mm (or 46 x 22 mm for the XL rail), and are sold in 3m bars.

A3.4 Fixing brackets (*see Fig. A4*)

They are L-section brackets, made of aluminium grade 6060 T5: section 150 x 40 mm, thickness 30/10th mm (ref ETANCO ISOALU LR 150, length 100mm), with the following performances:

- Vertical load resistance (1mm deformation) : 208 daN,
- Horizontal load resistance: 250 daN.

Each bracket is fastened to the vertical profile by two self-drilling Ø5.5x22mm screws, defined in § 3.5.

Brackets' vertical centre-to-centre distance is 750mm (*see Fig. A1*).

A3.5 Fasteners

The support rails of ZEPHIR panels and the fixing brackets are fastened on the vertical tracks with stainless steel, type A2, self-drilling, Ø 5.5 x 25 mm screws with flat underside. The screws must present a minimum pull-out resistance P_k of 1500 N (determined according to Standards NF P 30-310 or 30-314). Ref.: ETANCO PERFIX 5.25 TH8 A2 self-drilling Ø 5.5 x 25 mm.

A3.6 ZEPHIR panels

The ZEPHIR panels are defined in § 3 of the Technical File.

Tables and figures of Appendix A

Table A1 – Combined tensile and shear loads applied to metal anchors

3-meter aluminium rails fastened with 4 angle brackets ref. ISOALU LR 150 (length: 100mm).
Vertical rail centre-to-centre distance = 600mm. Brackets put alternatively on each side of the rail.
In compliance with French Decree dated October 22nd, 2010 and revisions, and Eurocode 8.

Loads (N)	Seismic areas	Plane perpendicular to the facade			Plane parallel to the facade		
		Building type class			Building type class		
		II	III	IV	II	III	IV
Tensile loads (N)	2		1,185	1,360		2,059	2,452
	3	1,185	1,360	1,535	2,059	2,452	2,846
	4	1,496	1,689	1,881	2,697	3,131	3,563
Shear loads (V)	2		270	270		357	397
	3	270	270	270	357	397	442
	4	297	297	297	437	486	538

The values of the table can be halved when fixing brackets face to face (2 x4 brackets)

No seismic requirements

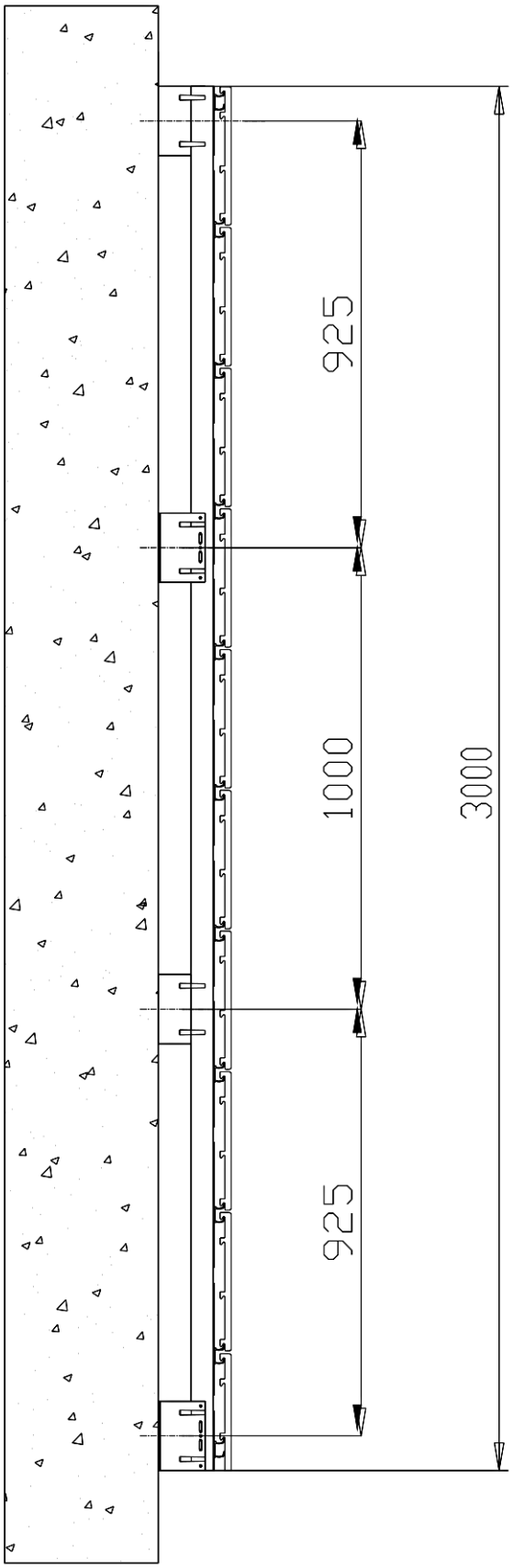

Figure A1 – Installation - General rule

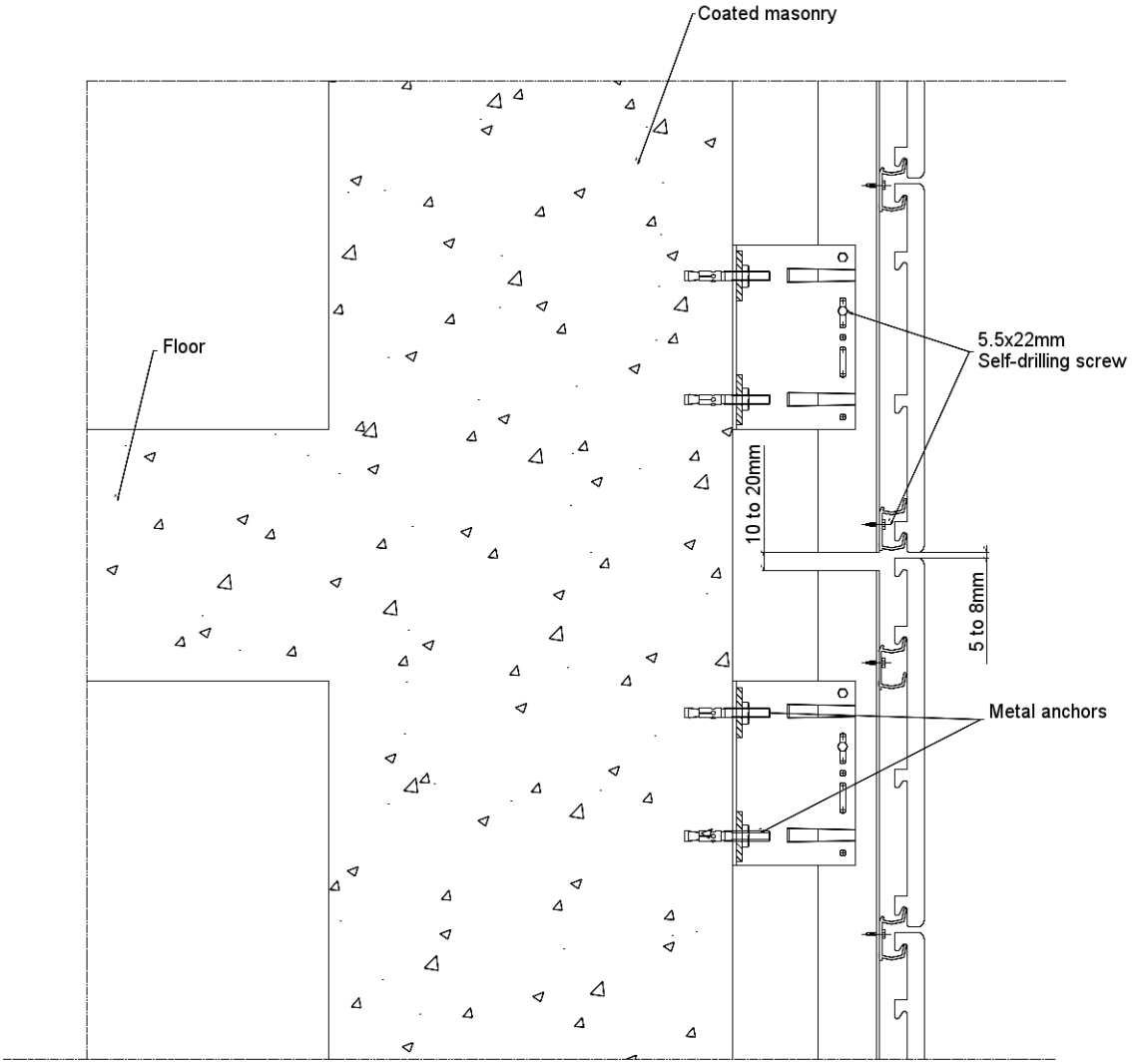

Figure A2 – Splitting the framework at floor level

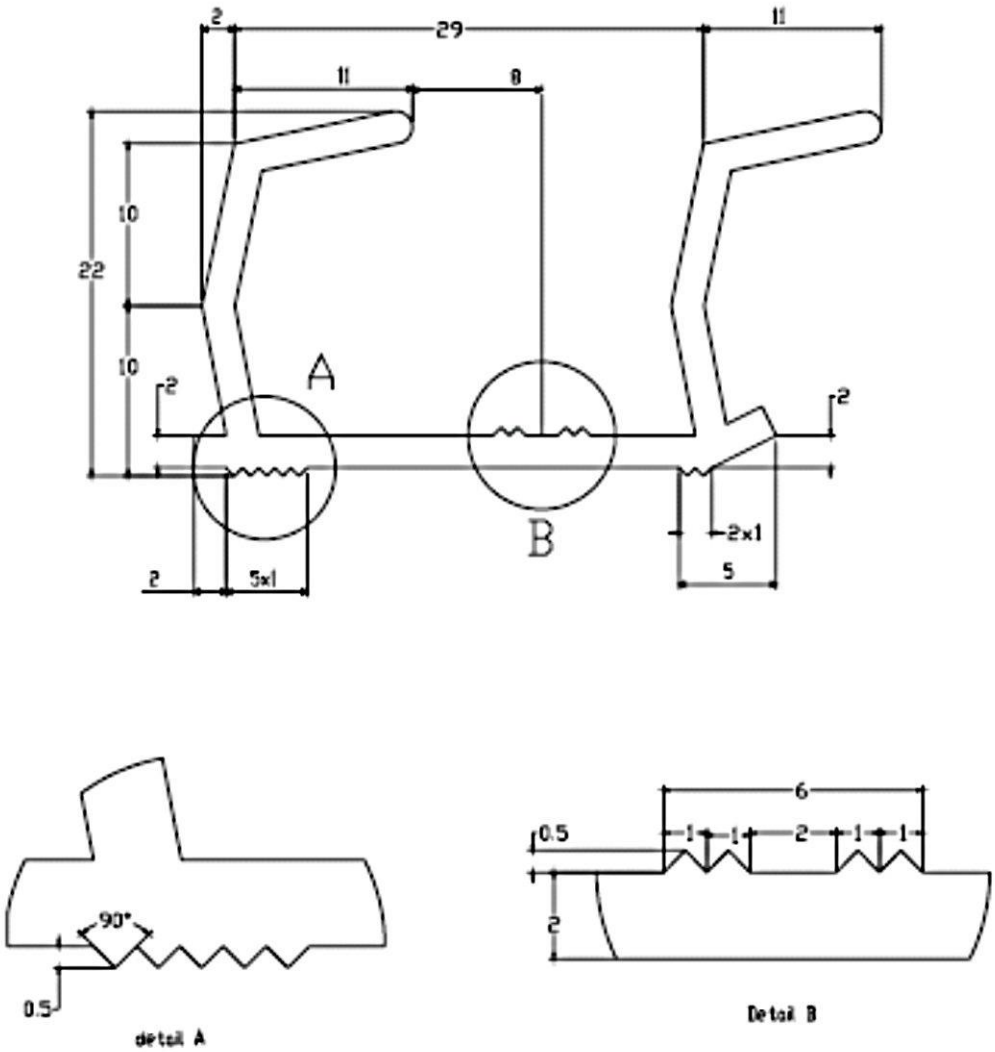

Figure A3 – ZEPHIR horizontal support rail

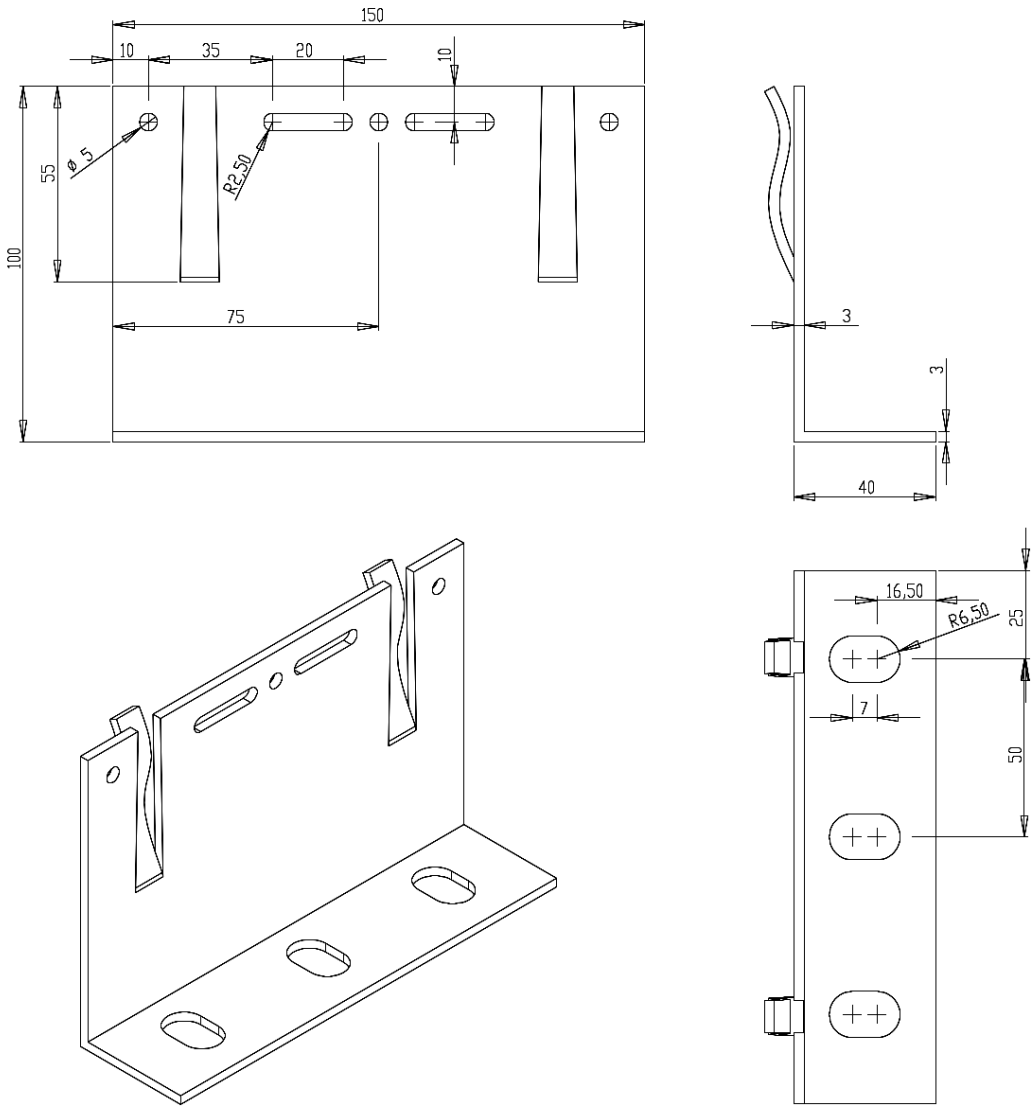

Figure A4 – Brackets

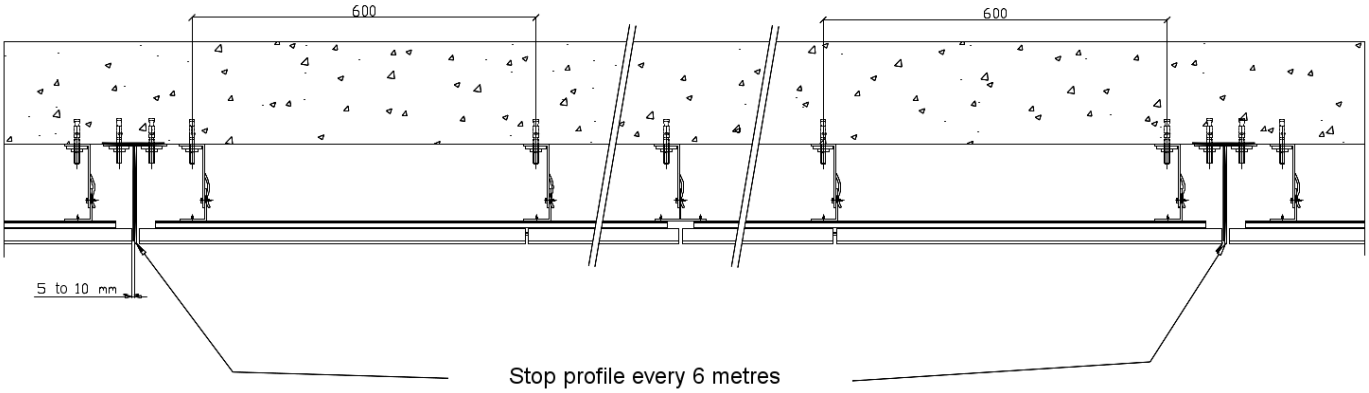

- Minimum thickness: 3mm
- Galvanized steel sheet (min. Z275) that complies with Standard P 34-310 and power-coated according to Standard XP P 34-301,
- Aluminium sheet, powder-coated according to Standard NF EN1396 or anodized (class 15 or 20) according to Standard NF EN A91-450.

Figure A5 – Stop profile

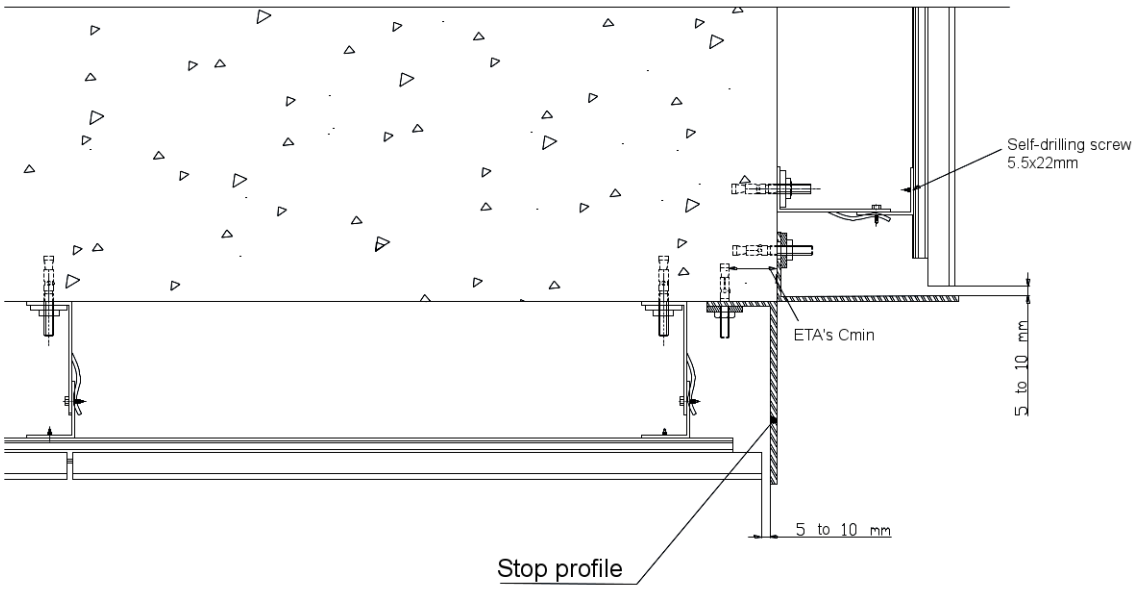

Figure A6 – Corner profile – Option 1

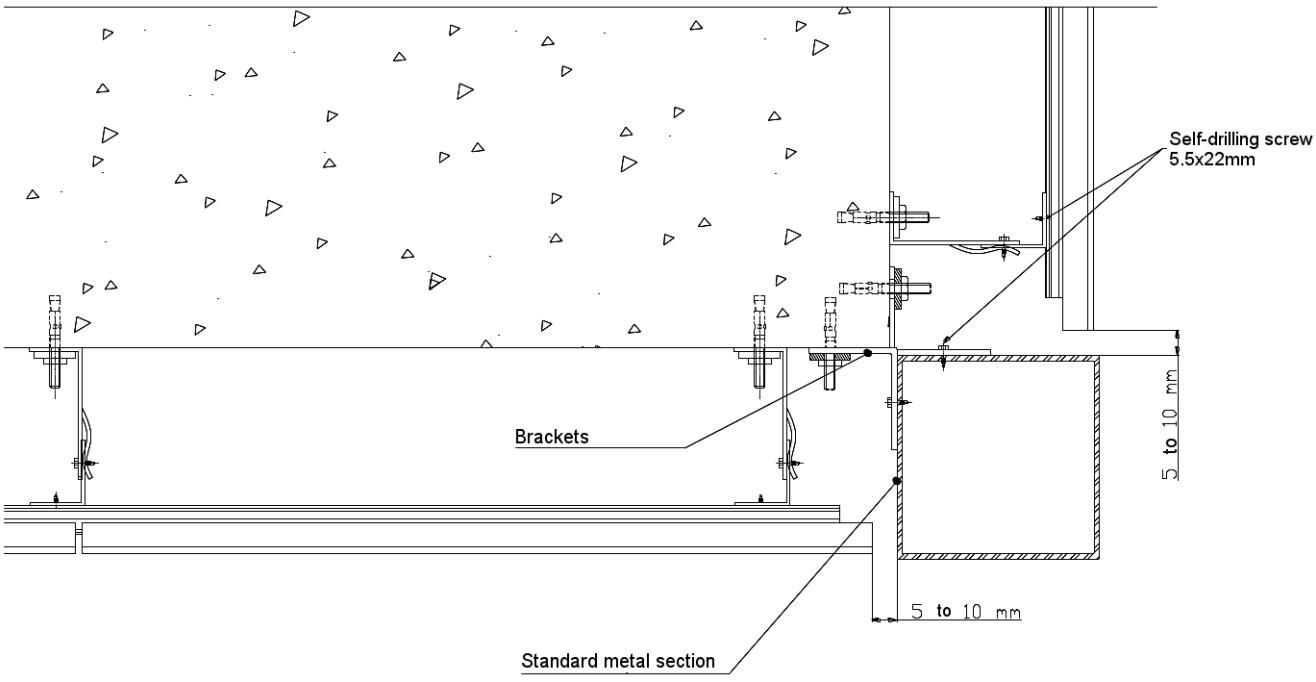

- Minimum thickness: 3mm
- Galvanized steel sheet (min. Z275) that complies with Standard P 34-310 and power-coated according to Standard XP 34-301,
- Aluminium sheet, powder-coated according to Standard NF EN1396 or anodized (class 15 or 20) according to Standard NF EN A91-450

Figure A6bis – Corner profile – Option 2

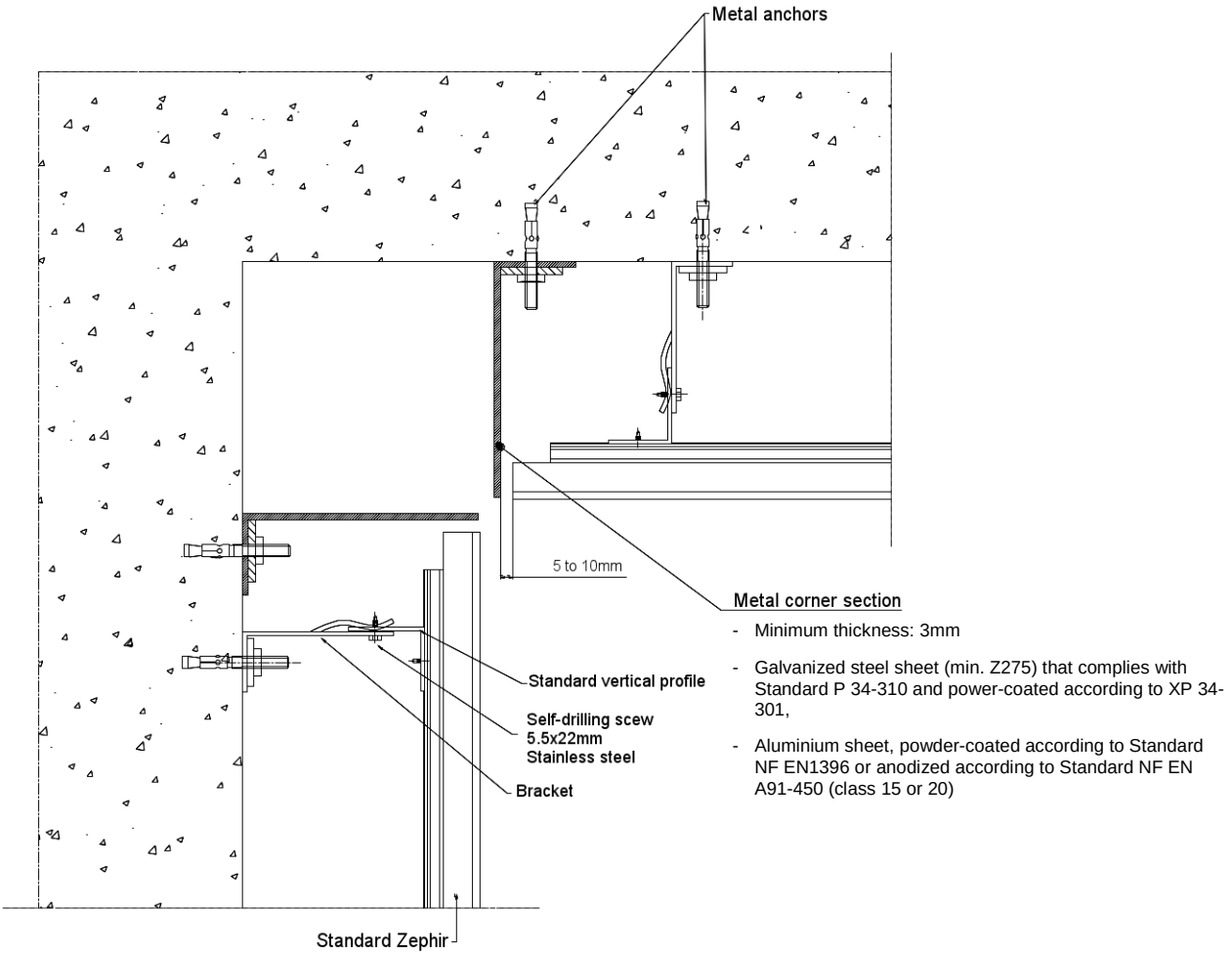

Figure A7 – Internal corner

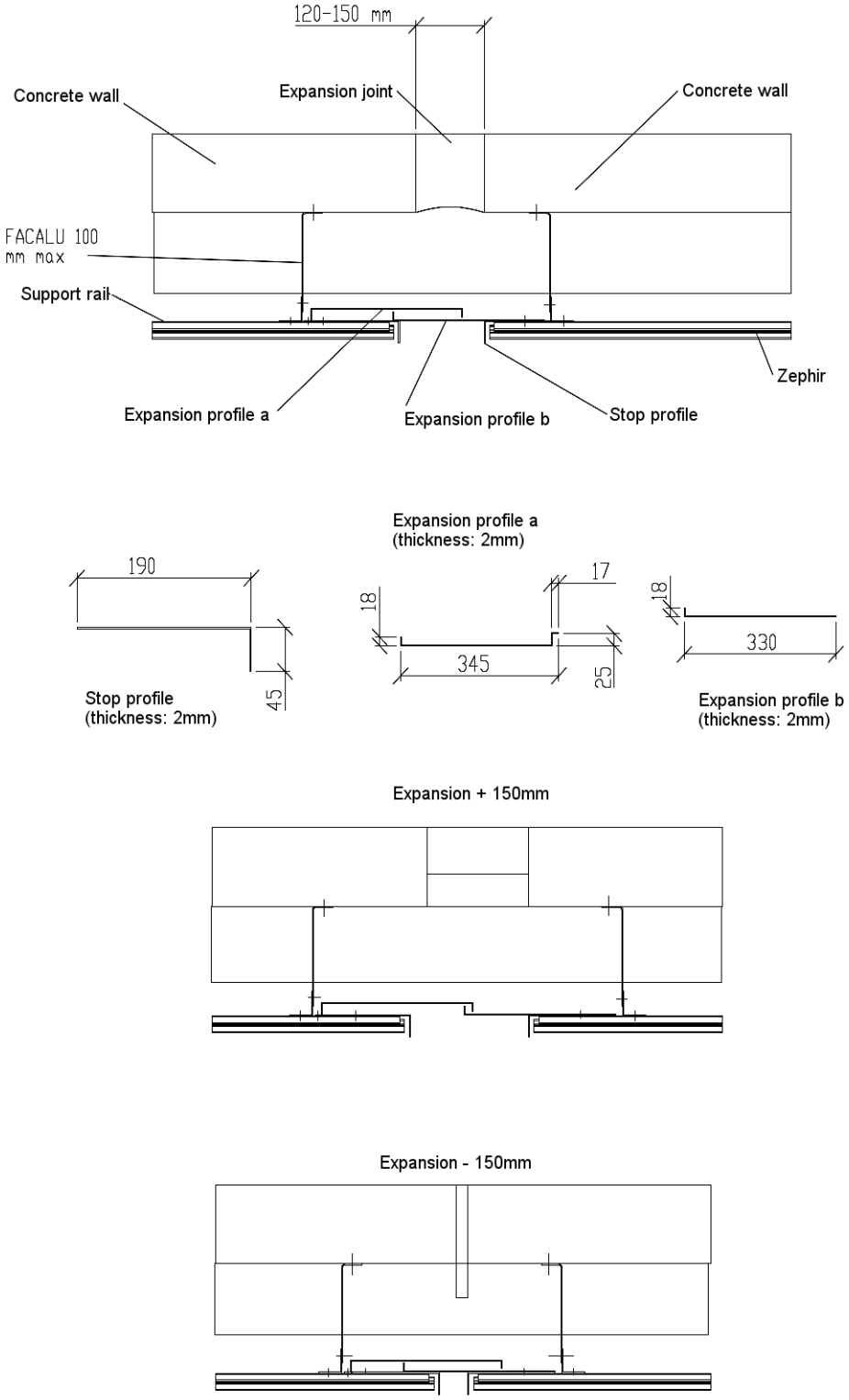

Figure A8 – Stop profiles at expansion joint

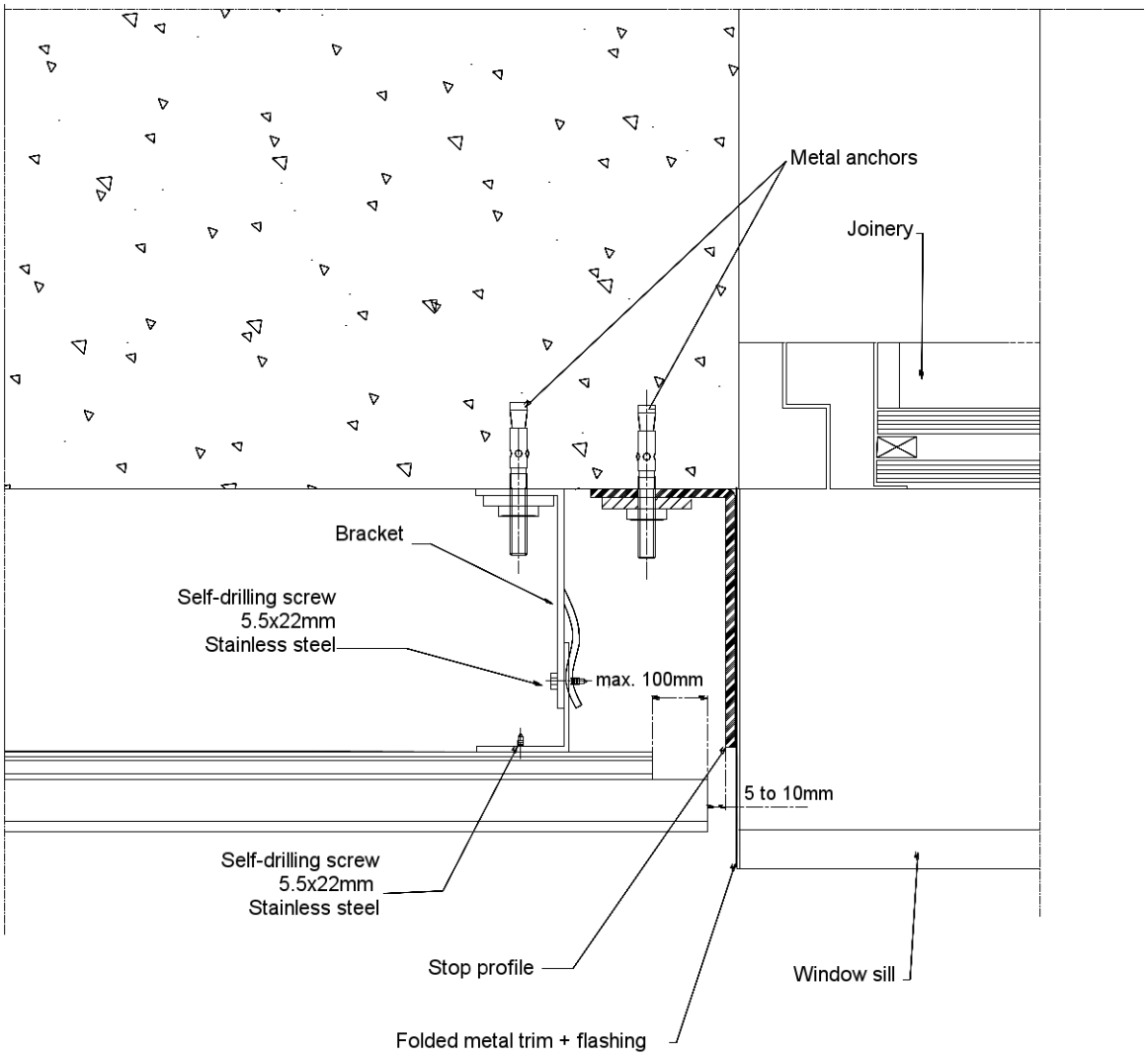

Figure A9 – Window jamb – Option 1

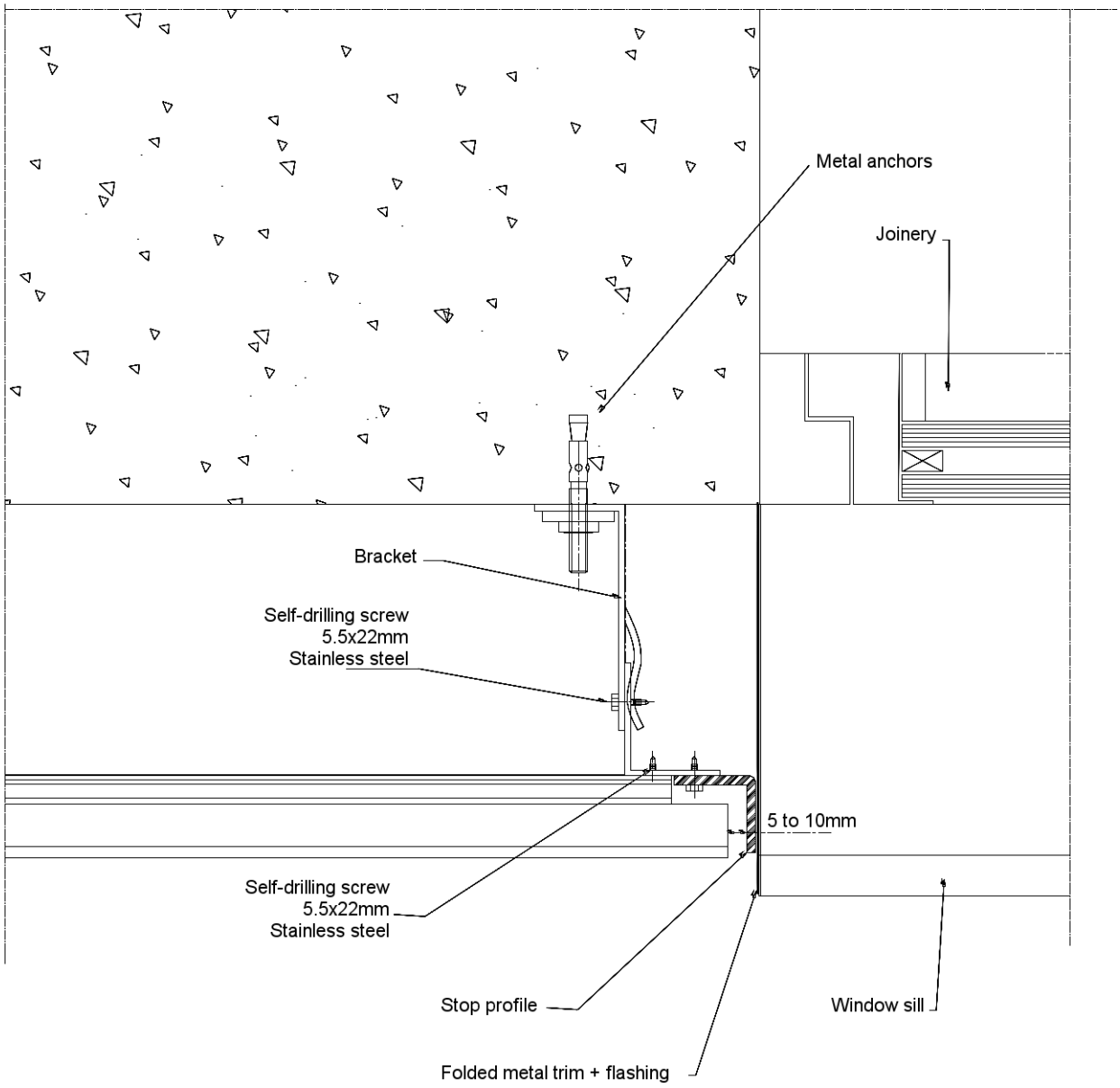

Figure A9bis – Window jamb – Option 2

Appendix B

Installation of ZEPHIR / ZEPHIR EVOLUTION in seismic regions on an aluminium frame with 200mm ISOLCO+ brackets

B1. Field of application

The ZEPHIR wall cladding system - maximum size 300x600mm -, and the ZEPHIR EVOLUTION wall cladding system – maximum size 300x1200mm - can be installed on an aluminium frame using 200mm ISOLCO+ brackets, in seismic areas and on types of building as shown in the following table (based on the Decree dated October 22nd, 2010, and revisions):

Seismic areas	Building class type			
	I	II	III	IV
1	O	O	O	O
2	O	O	X❶	X
3	O	X❷	X	X
4	O	X❷	X*	X*

O	Installation possible without specific provisions in the accepted field of application
X	Installation possible on flat, vertical concrete walls, according to the prescriptions of Appendix A
❶	Installation possible without specific provisions in the accepted field of application for one-floor schools (belonging to class type III) that meet the conditions of paragraph 1.1[1] of "Rules for seismic buildings – PS-MI 89 revision 92" (NF P06-014)
❷	Installation possible without specific provisions in the accepted field of application for buildings of class type II that meet the conditions of paragraph 1.1[1] of "Rules for seismic buildings – PS-MI 89 revision 92" (NF P06-014)
*	Installation prohibited for ZEPHIR

B2. Technical assistance

TERREAL offers technical support to the developer at the design stage and to the contractor at the construction stage regarding specifications for installation.

Notes produced by TERREAL inform the developer and the contractor, and provide them with recommendations on how to install the ZEPHIR / ZEPHIR EVOLUTION wall-cladding systems in seismic regions.

B3. Prescriptions

B3.1 Substrate

The support wall on which the wall cladding is installed is made of shuttered concrete, complying with Rules DTU 23.1 and Eurocode 8.

B3.2 Fastening the brackets to the wall

Fixing on the concrete supporting structure is made using metal anchors bearing a CE mark related to a European Technical Assessment or Evaluation referring to ETAG 001, parts 2 to 5, with performance class C1 under Appendix E, for all seismic areas and all building classes that require specific justification.

Galvanized steel anchors are acceptable if they are protected by insulation, for a use in protected outside environments, either in non-polluted rural areas or urban and industrial environments with normal or severe pollution.

For other cases, stainless steel A4 anchors must be used.

Anchors must sustain the loads shown in Table B1.

Example of anchor that sustains loads listed in Table B1:

FM753 Crack M8 from Friulsider.

For configurations not listed in the table, loads can be calculated according to CSTB Workbook 3725, inside the limits imposed by the validated use.

B3.3 Aluminium framework

The fixed aluminium framework shall comply with the requirements of CSTB Workbook No. 3194, completed with the following:

Vertical tracks are split at each floor level of the building (see Fig. B2). A 10 to 20 mm joint is kept between successive profiles.

B3.31 Vertical profiles (*see Fig. B1*)

The vertical profiles are made of Aluminium grade EN AW 6060 T5 complying with Standard NF EN 755-2. They are 25/10th mm thick, 3m long, with a section of 50 x 42 mm.

These profiles are sold by the ETANCO Company under reference ETANCO FACALU L50/42/2.5 Lg 3.00m.

A lateral stop profile is fixed to the support every 6m (*see Fig. B3*)

The centre-to-centre distance between vertical profiles is 900mm for ZEPHIR and 1000mm for ZEPHIR EVOLUTION.

B3.32 Horizontal support rails for ZEPHIR / ZEPHIR EVOLUTION panels (*see Fig. 1b and 2a*)

The aluminium support rails for ZEPHIR / ZEPHIR EVOLUTION panels are defined in § 3.2 and 3.3 of the Technical File.

B3.4 Fixing brackets (*see Fig. B1*)

Reference ETANCO ISOLCO+ 200: made of S280GD steel, galvanized (Z350), 200mm long, 80mm high, 20/10th mm thick, section 200x45mm, laid staggered.

Each bracket is fastened to the vertical profile by two self-drilling Ø5.5x25mm screws, defined in § 3.5.

Brackets are placed with a maximum span of 1m.

B3.5 Interfaces

Plastic interfaces, 80x80mm, 1mm thick, with an adhesive face, are placed between aluminium vertical profiles and galvanized steel brackets in order to avoid galvanic corrosion between the two. Supplied by TERREAL

B3.6 Fasteners

The ZEPHIR / ZEPHIR EVOLUTION support rails and the fixing brackets are fastened on the vertical tracks with stainless steel, type A2, self-drilling, Ø 5.5 x 25 mm screws with flat underside. The screws must present a minimum pullout resistance P_k of 1500 N (determined according to Standards NF P 30-310 or 30-314). Ref.: ETANCO PERFIX 5.25 TH8 A2 self-drilling Ø 5.5 x 25 mm.

B3.7 ZEPHIR / ZEPHIR EVOLUTION panels

The ZEPHIR panels (max. length 60cm) and the ZEPHIR EVOLUTION panels (max. length 120cm) are defined in § 3 of the Technical File.

Tables and figures of Appendix B

Table B1 – Combined tensile and shear loads applied to metal anchors

Installation on fixed aluminium framework: 3-meter aluminium profiles, 1m centre-to-centre distance, fastened with four200mm brackets ref. ISOLCO+ 200, placed staggered with a 1m span.
In compliance with French Decree dated October 22nd, 2010 and revisions, and Eurocode 8.

Loads (N)	Seismic areas	Plane perpendicular to the facade			Plane parallel to the facade		
		Building type class			Building type class		
		II	III	IV	II	III	IV
Tensile loads (N)	2		1,843	1,860		4,215	4,627
	3	1,875	1,902	1,929	4,980	5,628	6,276
	4	1,936	1,975	2,014	6,453	7,396	8,338
Shear loads (V)	2		414	414		449	461
	3	414	414	414	473	497	524
	4	414	414*	414*	532	576*	624*

The values of the table can be halved when fixing brackets face to face (2 x4 brackets)

	No seismic requirements
*	Installation prohibited for ZEPHIR

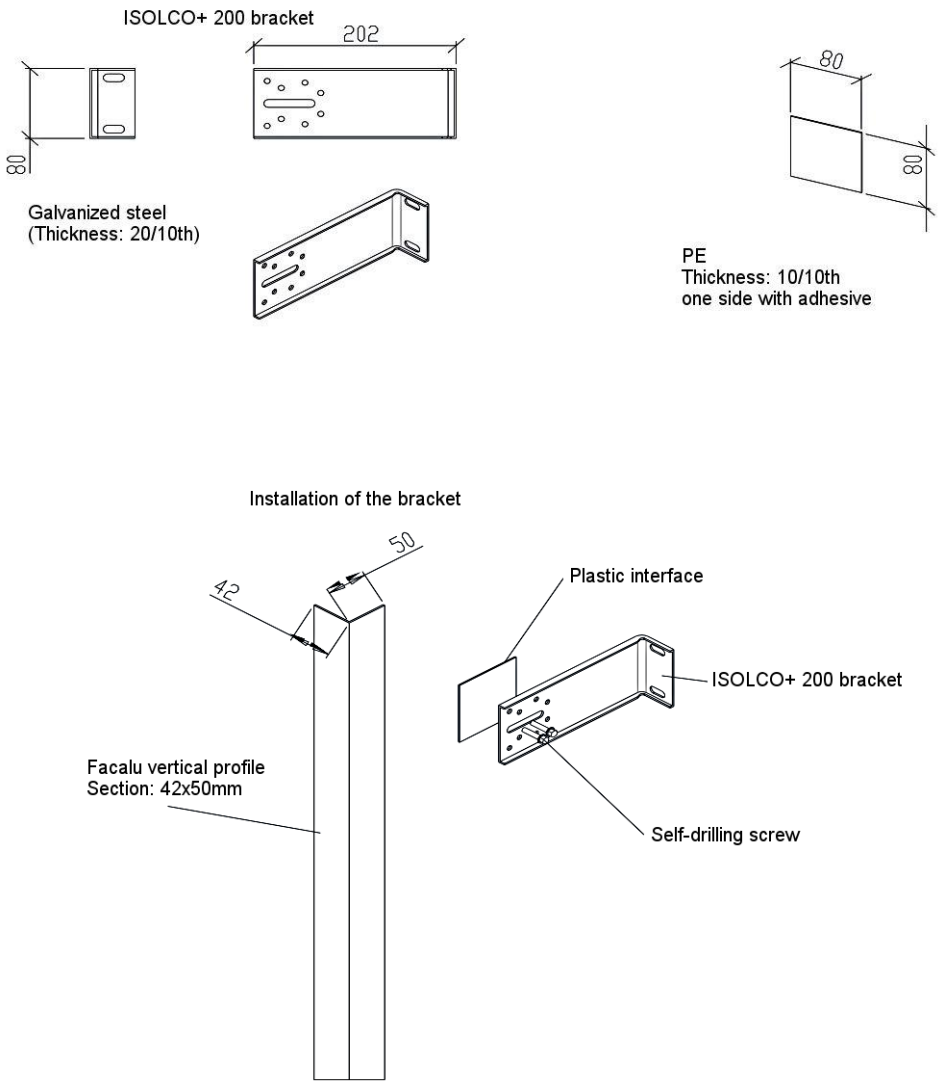

Figure B1 – Framework's bracket and vertical profile

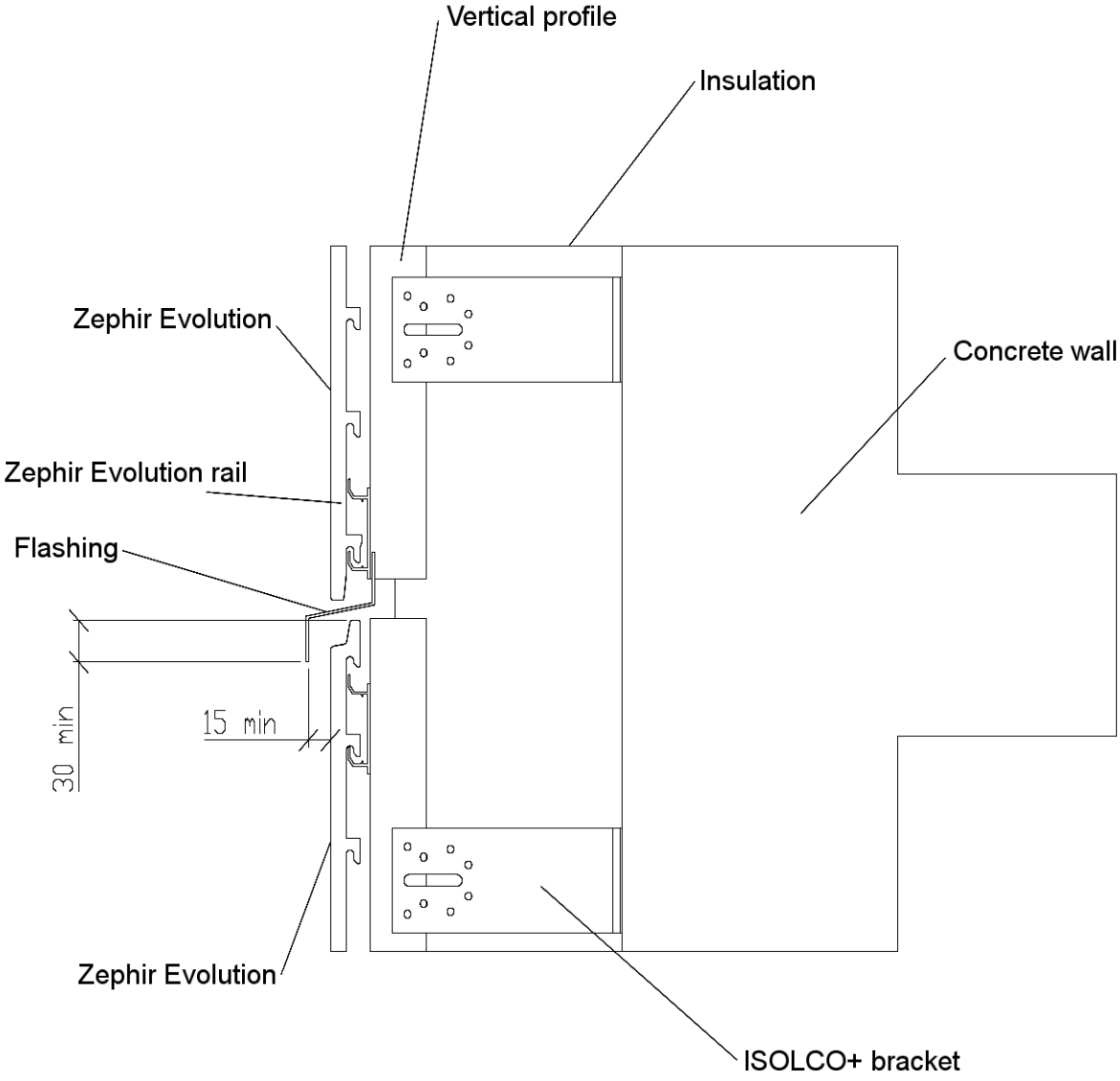

Figure B2 – Splitting the framework at floor level

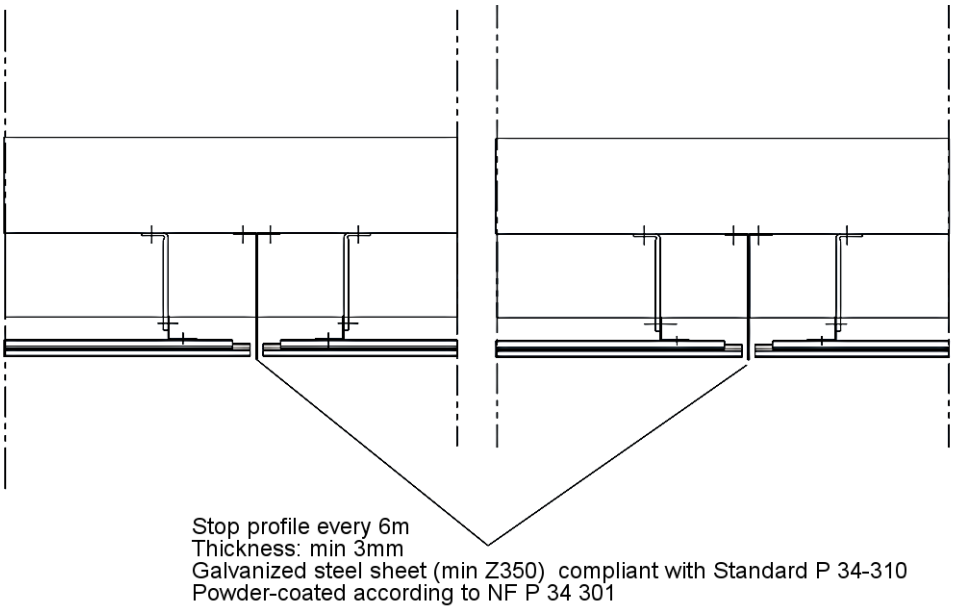

Figure B3 – Stop profile

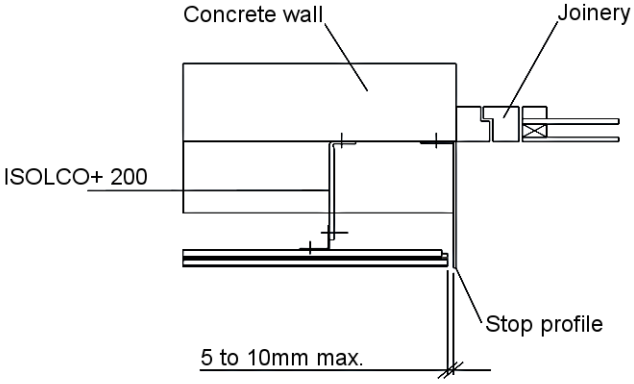

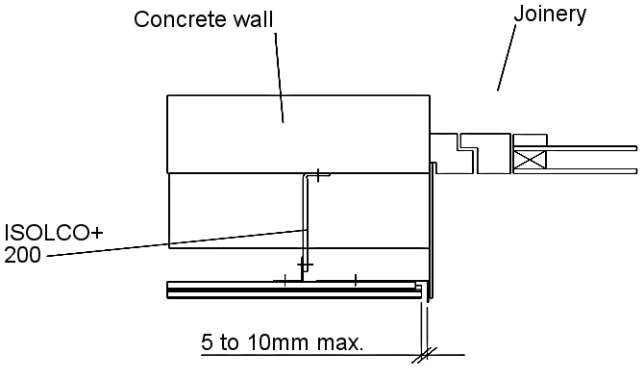

Figure B4 – Stop profile at edge

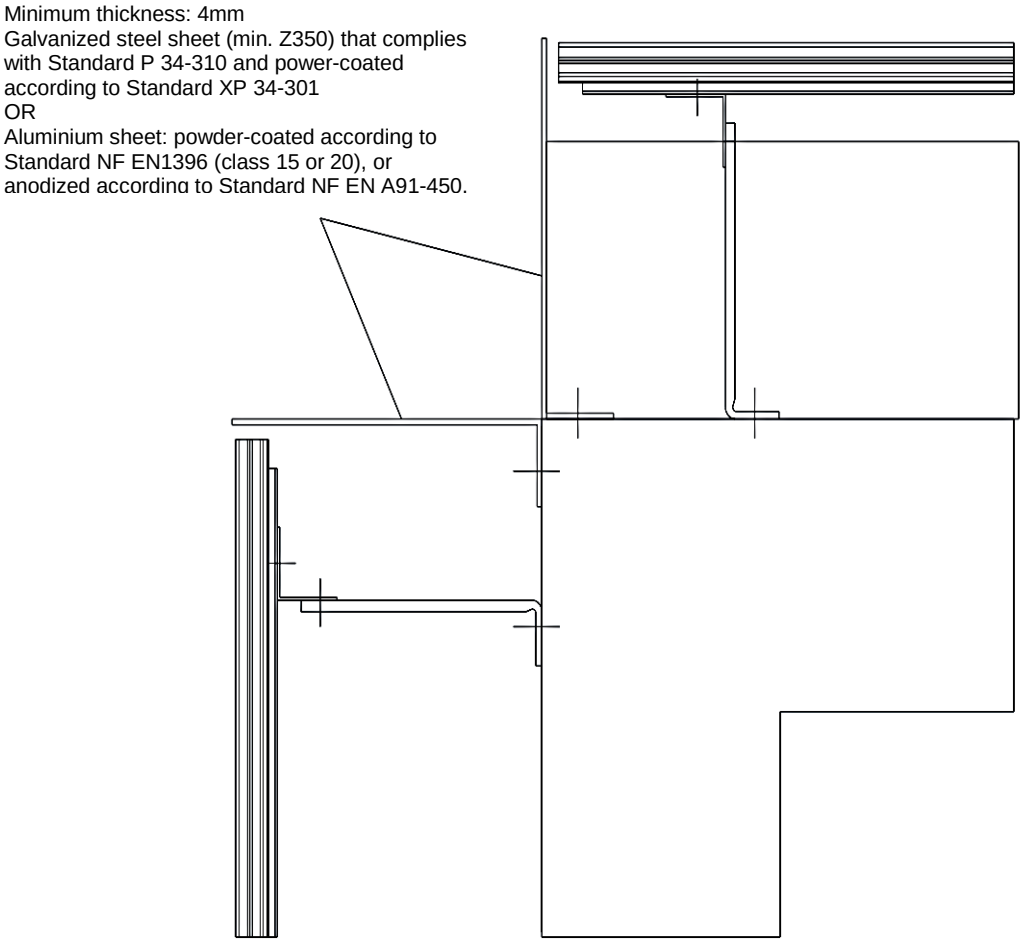

Figure B5 – External corner

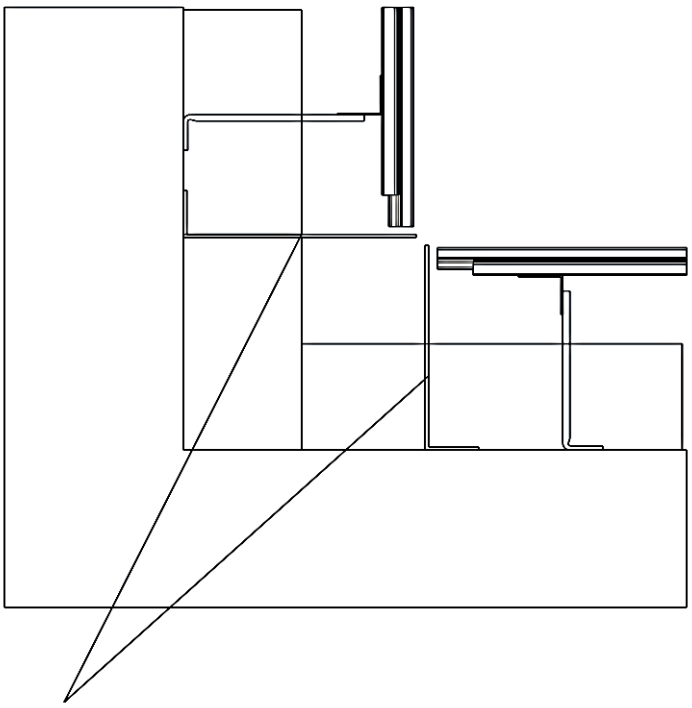

Minimum thickness: 4mm

Galvanized steel sheet (min. Z350) that complies with Standard P 34-310
and power-coated according to Standard XP 34-301
OR
Aluminium sheet: powder-coated according to Standard NF EN1396
(class 15 or 20), or anodized according to Standard NF EN A91-450.

Figure B6 – Internal corner

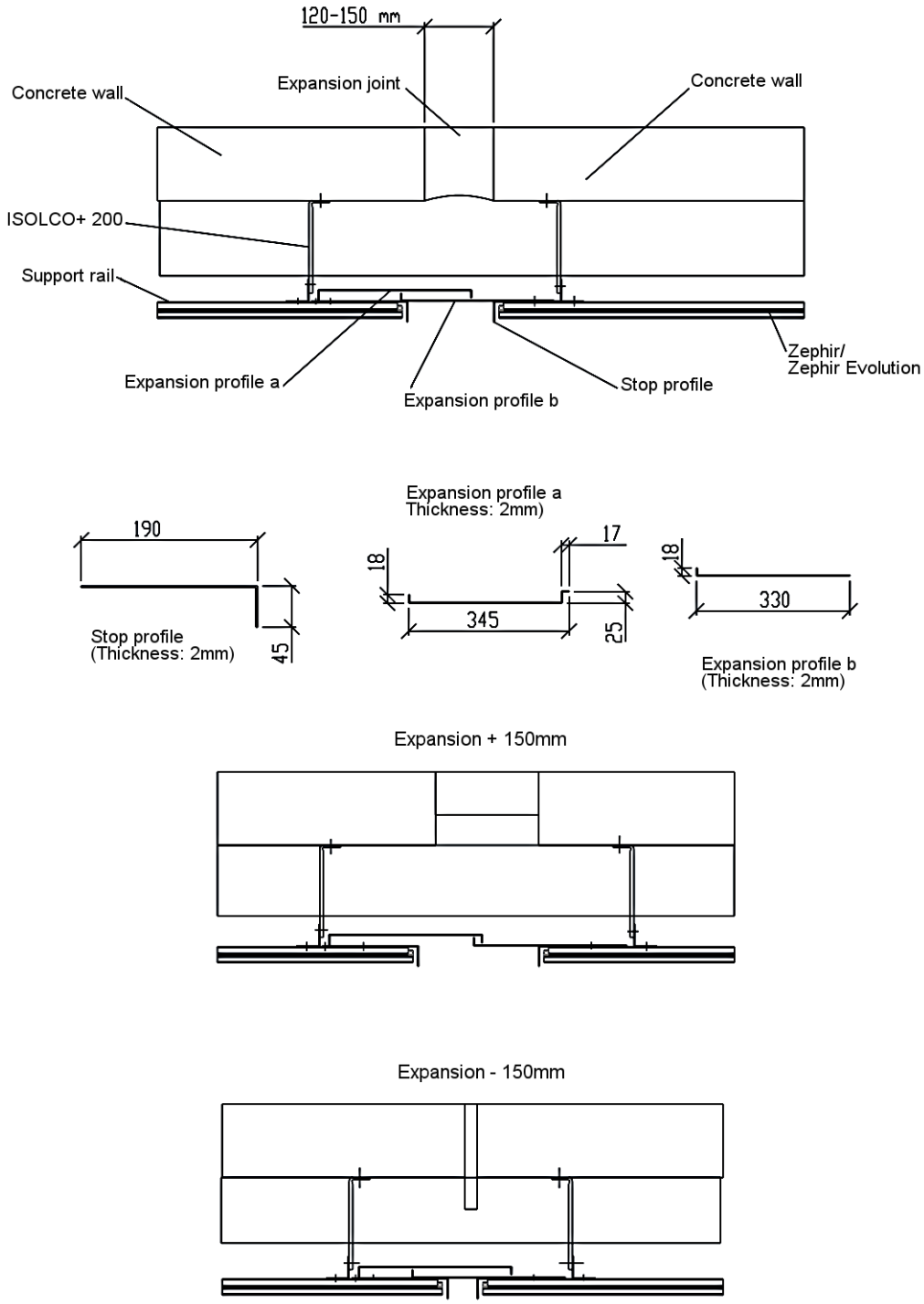

Figure B7 – Expansion joint – between 12 and 15cm